YB5515

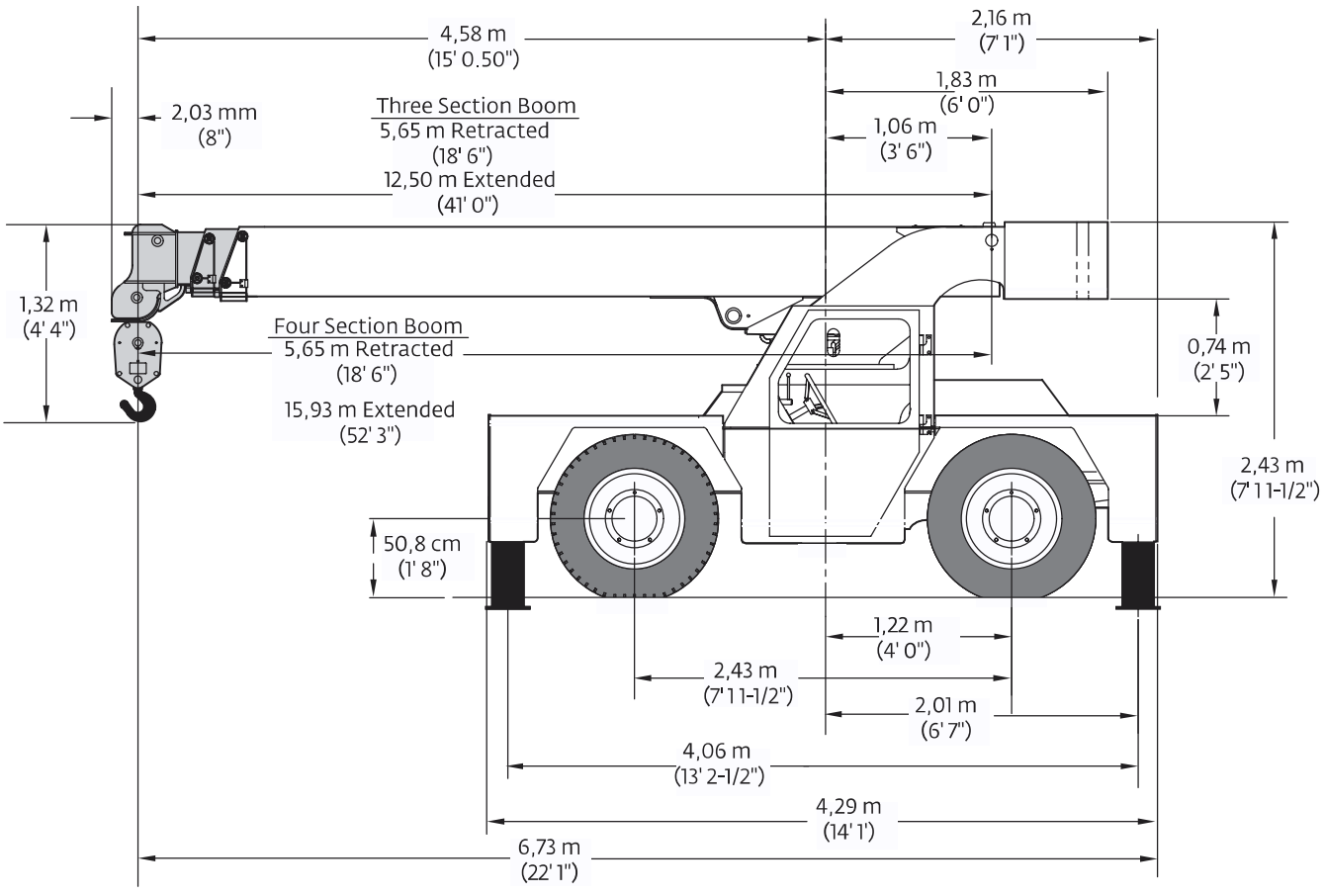

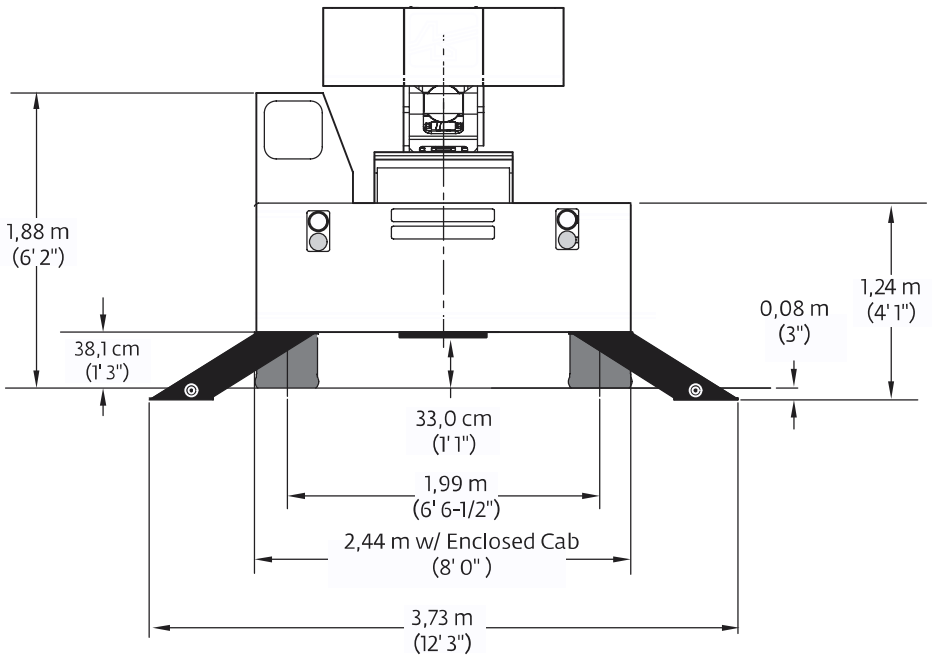

THIS CHART IS ONLY A GUIDE AND SHOULD NOT BE USED TO OPERATE THE CRANE.
The individual crane's load chart, operating instructions and other instructional plates must be read and understood prior to operating the crane.

YB5515
(four-section boom)

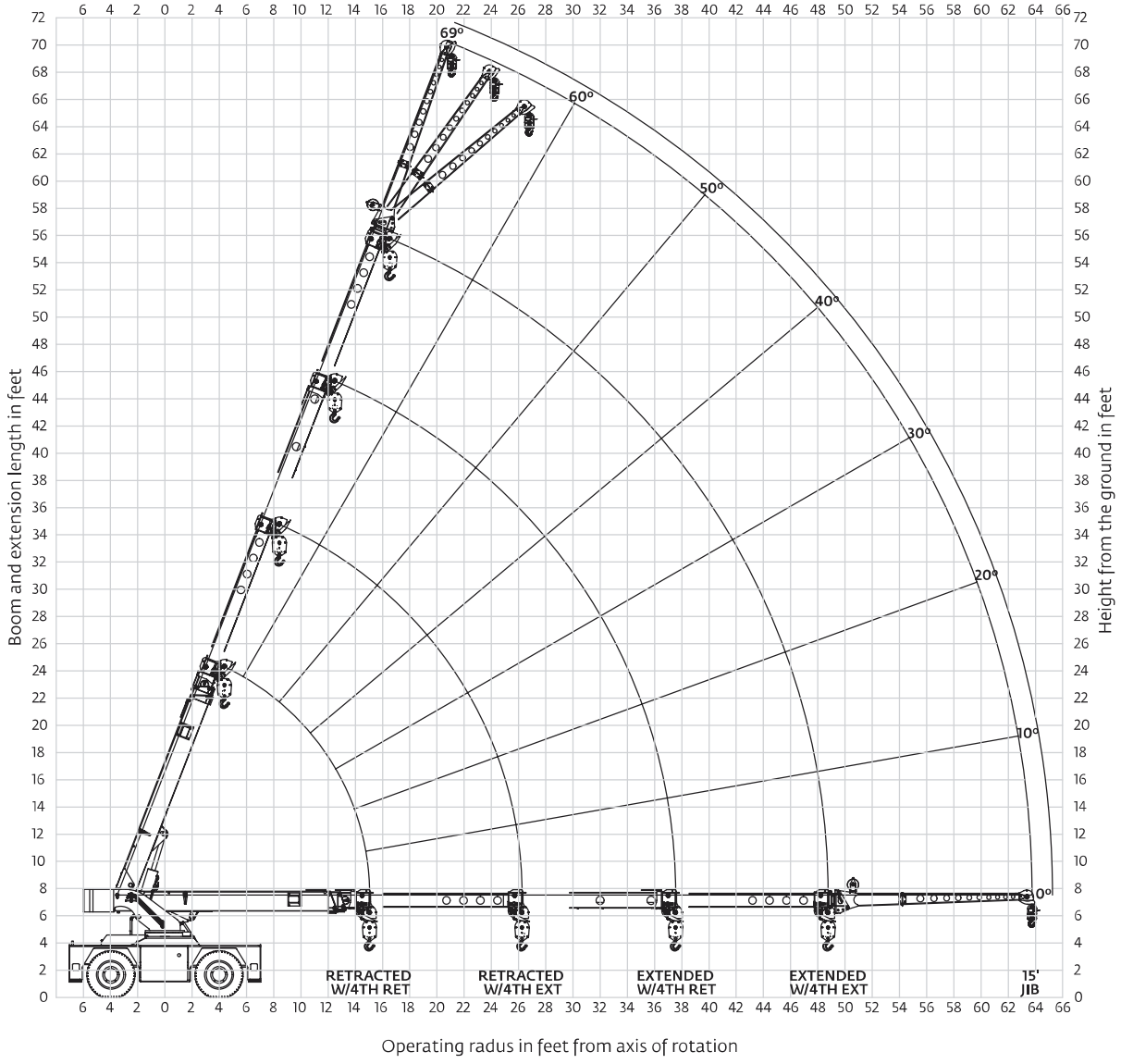

THIS CHART IS ONLY A GUIDE AND SHOULD NOT BE USED TO OPERATE THE CRANE.
The individual crane's load chart, operating instructions and other instructional plates must be read and understood prior to operating the crane.

YB5515
(four-section boom)

RADIUS (ft)	4TH RETRACTED					RADIUS (ft)	4TH EXTENDED			
	ON OUTRIGGERS (lb)		ON RUBBER (lb)				ON OUTRIGGERS (lb)		ON RUBBER (lb)	
	F/R	360°	F/R	360°			F/R	360°	F/R	360°
6.0	30,000	30,000	17,000	17,000		6.0	-	-	-	-
8.0	26,200	26,200	13,500	14,600		8.0	11,000	11,000	11,000	11,000
10.0	22,300	22,300	10,700	11,000		10.0	10,700	10,700	10,700	10,700
12.0	18,600	18,600	8710	7650		12.0	9250	9250	9250	9250
14.0	14,800	14,800	7210	5480		14.0	8290	8390	7760	7500
15.0	13,000	13,000	6600	4890		15.0	8200	8200	7150	6080
16.0	12,200	12,200	6060	4500		16.0	8110	8110	6610	5510
18.0	10,800	10,600	4950	3750		18.0	7950	7950	5680	4500
20.0	9630	8630	3980	3080		20.0	7820	7820	4730	3560
22.0	8640	7350	3230	2460		22.0	7710	7710	3980	3000
24.0	7790	6460	2720	1990	MAIN BOOM	24.0	7630	7270	3410	2520
26.0	6800	5700	2360	1610		26.0	7100	6330	2940	2150
28.0	5820	5040	2100	1410		28.0	6590	5420	2550	1840
30.0	5020	4420	1880	1220		30.0	5710	4760	2190	1580
32.0	4400	3950	1650	1070		32.0	5180	4080	1880	1360
34.0	3930	3570	1460	920		34.0	4680	3570	1600	1160
36.0	3510	3190	1280	770		36.0	4250	3190	1370	990
37.5	3210	2890	1180	680		37.5	3830	2970	1240	880
40.0	2950	2600	1070	610		40.0	3400	2700	1070	740
42.0	2760	2430	970	550		42.0	3150	2490	960	630
44.0	2590	2250	890	500		44.0	2890	2300	870	540
46.0	2430	2090	800	450		46.0	2630	2130	790	470
48.8	2240	1850	680	380		48.8	2320	1930	710	370
52.5	2030	1480	500	290	JIB	52.5	2070	1710	590	280
58.0	-	-	-	-		58.0	1720	1380	420	170
63.8	-	-	-	-		63.8	1330	1020	230	60

MAIN BOOM ANGLE (deg)	JIB STRUCTURAL CAPACITIES (lb)					
	4TH RETRACTED			4TH EXTENDED		
	0°	15°	30°	0°	15°	30°
69	6000	3900	2800	5180	3900	2800
65	5000	3500	2550	4970	3500	2550
60	4300	3150	2350	4300	3150	2350
55	3800	2850	2200	3800	2850	2200
50	3400	2600	2100	3400	2600	2100
45	3050	2400	2000	3050	2400	2000
40	2800	2250	1950	2800	2250	1950
35	2600	2150	1900	2600	2150	1900
30	2400	2080	1850	2400	2080	1850
25	2300	2050	-	2300	2050	-
20	2200	2000	-	2200	2000	-
15	2100	1950	-	2100	1950	-
10	2050	-	-	2050	-	-
5	2020	-	-	2020	-	-
0	2000	-	-	2000	-	-

NOTES:
JIB CAPACITY IS LIMITED BY BOTH STRUCTURAL CAPACITY CHART AND MAIN CAPACITY CHART.

SHADED AREAS ARE GOVERNED BY STRUCTURAL STRENGTH, DO NOT RELY ON TIPPING.

OPERATION OF THIS EQUIPMENT IN EXCESS OF RATING CHARTS AND DISREGARD OF INSTRUCTIONS IS DANGEROUS AND VOIDS WARRANTY.

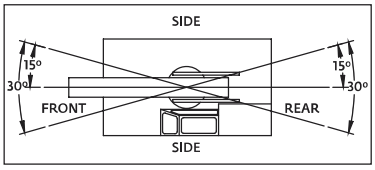

REDUCTION CHART		
	FROM MAIN BOOM RATINGS	FROM JIB RATINGS
MAIN BLOCK	210 lb	N/A
HOOK & BALL	100 lb	100 lb
JIB, STOWED	0 lb	N/A
JIB, DEPLOYED	700 lb	0 lb

RIGGING CHART	
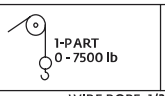 1-PART 0 - 7500 lb	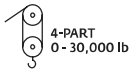 4-PART 0 - 30,000 lb
WIRE ROPE: 1/2 inch diameter Min. breaking strength 26,250 lb	

1) The rated loads are the maximum lifting capacities as determined by operating radius only. Any combination of boom lengths and angles may be used to obtain operating radius. The operating radius is the horizontal distance from a projection of the axis of rotation to the supporting surface, before loading, to the center of vertical hoist line or tackle with load applied.

2) The rated loads shown on outriggers do not exceed 85% of actual tipping. The rated loads shown on rubber do not exceed 75% of actual tipping. These ratings are based on freely suspended loads with the crane leveled, standing on a firm, uniform supporting surface. Practical working loads depend on supporting surface, operating radius and other factors affecting stability. Hazardous suroundings, climatic conditions, experience of operator and proper training must be taken into account by the operator.

3) The weights of all load handling devices, such as hooks, hook blocks, slings, etc., except the hoist rope, shall be considered as part of the load. See reduction chart.

4) Ratings on outriggers are with outriggers fully extended.

5) Ratings on rubber depend on tire capacity, condition of tires and proper inflation pressure (120 psi). Loads on rubber may be transported at a maximum speed of 2.5 mph on a smooth, hard, level surface with the boom retracted to the shortest length possible and centered over the front.

6) For operating radius not shown, use load rating of next larger radius.

7) The maximum combined total boom and deck load is 16,000 lb. The maximum deck load only is 20,000 lb.

8) Do not induce any external side loads to boom or jib.

1302395YB

THIS CHART IS ONLY A GUIDE AND SHOULD NOT BE USED TO OPERATE THE CRANE.
The individual crane's load chart, operating instructions and other instructional plates must be read and understood prior to operating the crane.