Load Rating Chart

Model 2892S

©Manitex 2000

NOTE: Additional copies of this Load Rating Chart can be purchased from your Manitex Distributor. When ordering, use the part number shown in the bottom left corner of this page.

7300093-003 NR

RANGE DIAGRAM
- FULLY EXTENDED OUTRIGGER CONFIGURATION -

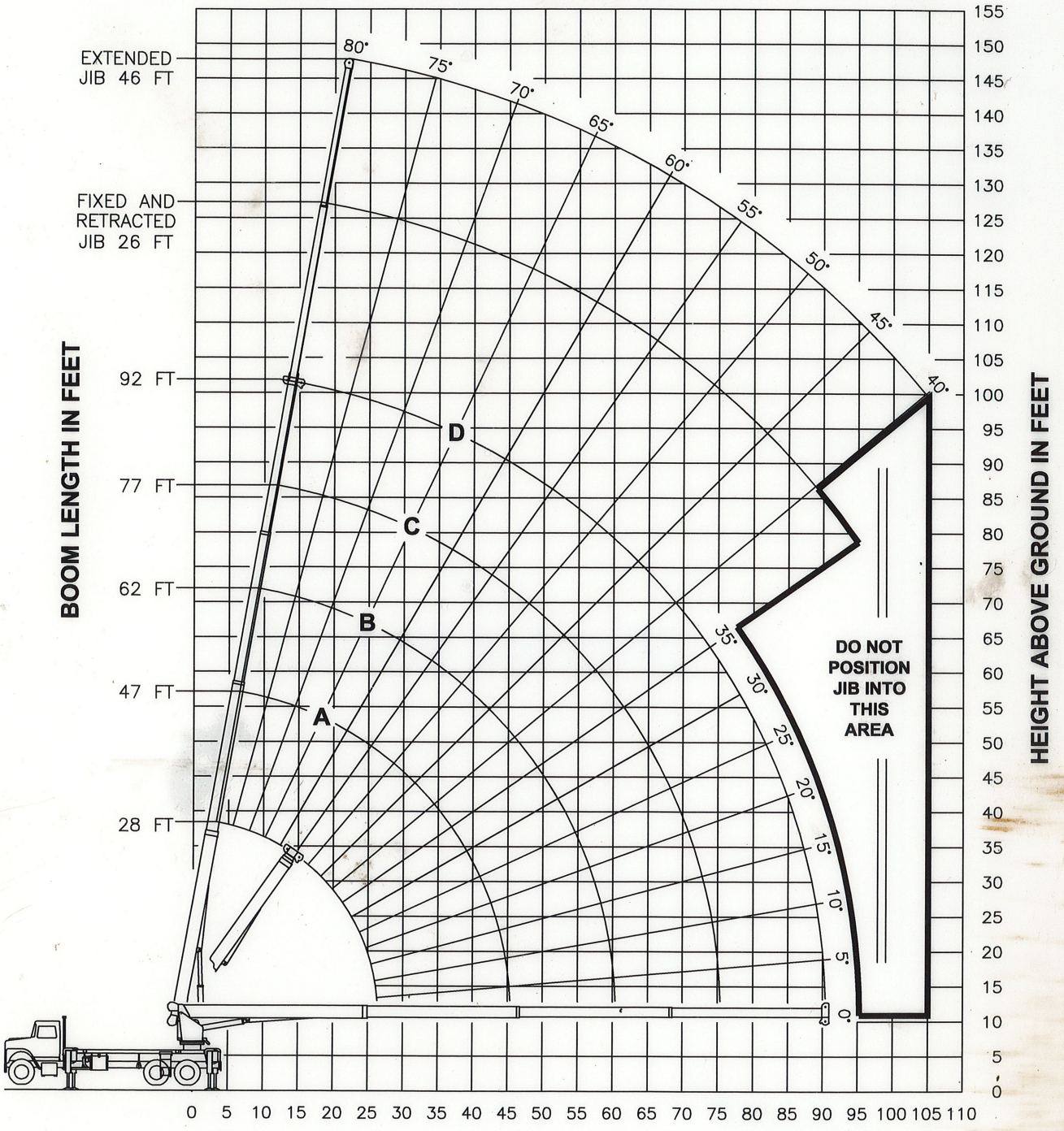

7300093-003 NR

USE THIS CHART ONLY WHEN ALL OUTRIGGERS ARE FULLY EXTENDED

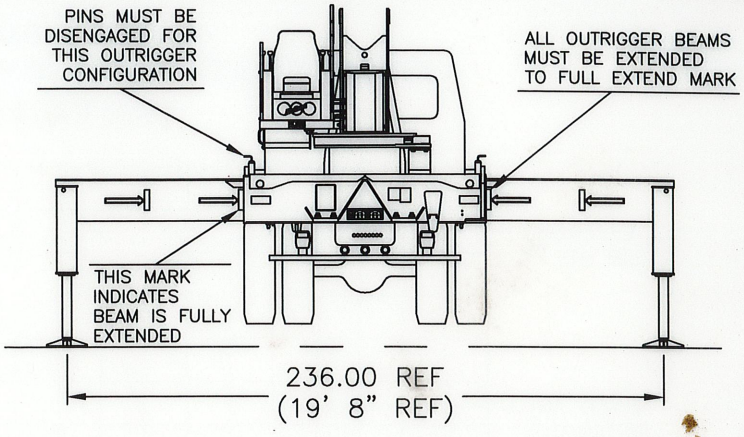

- FULLY EXTENDED OUTRIGGER CONFIGURATION -

MAIN BOOM LOAD RATINGS IN LBS WITH OUTRIGGERS PLACED AS SHOWN AND THE CRANE LEVEL

LMI CODE #1

OPERATING RADIUS FT	LOADED BOOM ANGLE / BOOM LENGTH AND MARKER		A		B		C		D	
	∠	28 FT	∠	47 FT	∠	62 FT	∠	77 FT	∠	92 FT
5	79	56000								
8	73	40670								
10	69	34520	78	22500						
12	64	30130	76	22500	80	22500				
15	57	23660	72	22310	77	20960	80	15920		
20	43	16950	65	17280	72	16920	77	13540	79	10700
25	22	12820	58	13210	67	13310	73	11710	76	9290
30			50	10460	62	10570	69	10160	73	8330
35			41	8470	57	8580	65	8640	70	7320
40			30	6910	51	7030	60	7090	66	6460
45			11	5700	44	5850	56	5910	63	5730
50					36	4880	51	4960	59	5010
55					27	4000	46	4090	55	4140
60					10	3290	40	3400	51	3450
65							33	2820	47	2880
70							24	2340	42	2400
75							9	1930	37	2000
80									31	1650
85									23	1340
90									9	1070
95										
100										
105										
	460 LBS		270 LBS		210 LBS		170 LBS		140 LBS	
	690 LBS		410 LBS		310 LBS		250 LBS		210 LBS	

JIB LOAD RATINGS IN LBS WITH OUTRIGGERS PLACED AS SHOWN AND THE CRANE LEVEL

OPERATING RADIUS FT	FIXED JIB LMI CODE #2		TELESCOPIC JIB LMI CODE #3		TELESCOPIC JIB LMI CODE #4	
	LOADED BOOM ANG	JIB LENGTH FOR ALL BOOM LENGTHS SEE WARNING NOTE 4	LOADED BOOM ANG	JIB LENGTH FOR ALL BOOM LENGTHS SEE WARNING NOTE 4	LOADED BOOM ANG	JIB LENGTH FOR ALL BOOM LENGTHS SEE WARNING NOTE 4
	∠	26 FT	∠	26 FT	∠	46 FT
10						
12						
15						
20						
25	79	5600	79	5400		
30	77	5300	77	5100	79	3400
35	75	4960	75	4700	77	3300
40	72	4490	72	4230	76	3200
45	70	4080	70	3820	74	3040
50	67	3710	67	3440	72	2800
55	65	3380	65	3100	69	2630
60	62	3080	62	2810	67	2480
65	59	2820	59	2540	65	2310
70	56	2520	56	2200	63	2110
75	53	2110	53	1820	60	1940
80	50	1760	50	1470	58	1770
85	46	1460	46	1170	55	1610
90	42	1200	42	900	52	1350
95	38	960	38	670	49	1120
100					46	910
105					43	720
	DEDUCTIONS FOR STOWED FIXED JIB					
	DEDUCTIONS FOR STOWED TELESCOPIC JIB					

RANGE DIAGRAM
- INTERMEDIATE OUTRIGGER CONFIGURATION -
(MID EXTEND)

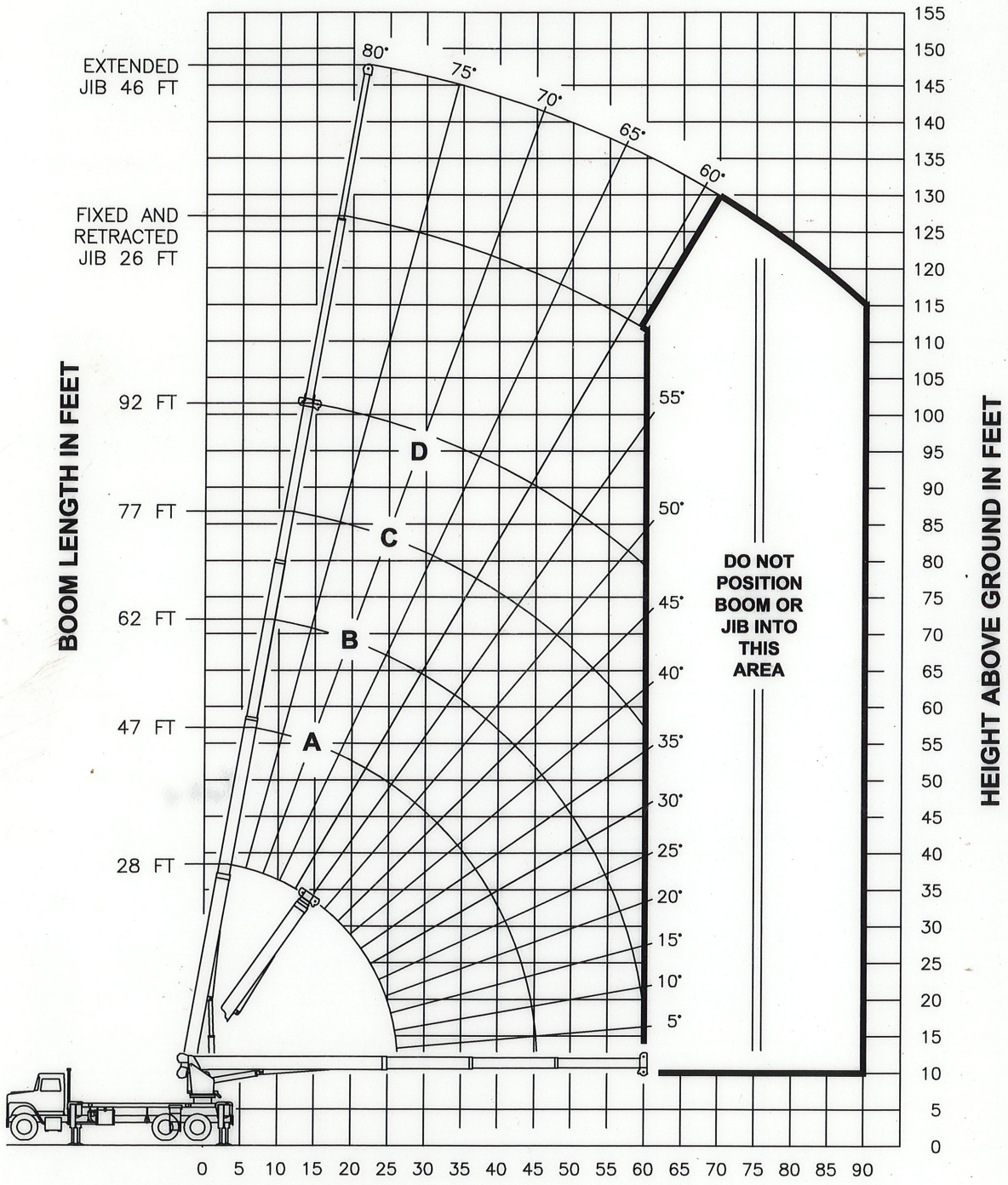

OPERATING RADIUS FROM CENTERLINE OF ROTATION IN FEET

NOTE : LIFTING PERSONNEL WITH CRANE IN THIS OUTRIGGER CONFIGURATION IS STRICTLY PROHIBITED. USE ONLY FULLY EXTENDED OUTRIGGER CONFIGURATION WHEN LIFTING PERSONNEL.

7300093-003 NR

USE THIS CHART ONLY WHEN ALL OUTRIGGERS ARE IN THE INTERMEDIATE POSITION

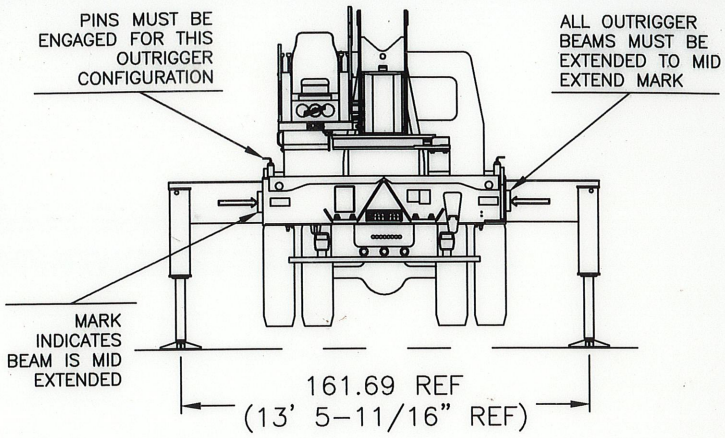

- INTERMEDIATE OUTRIGGER CONFIGURATION - (MID EXTEND)

MAIN BOOM LOAD RATINGS IN LBS WITH OUTRIGGERS PLACED AS SHOWN AND THE CRANE LEVEL

LMI CODE #9

OPERATING RADIUS FT	LOADED BOOM ANGLE / BOOM LENGTH AND MARKER		A		B		C		D	
	∠	28 FT	∠	47 FT	∠	62 FT	∠	77 FT	∠	92 FT
5	79	56000								
8	73	40670								
10	69	34520	78	22500						
12	64	30130	76	22500	80	22500				
15	57	21360	72	21880	77	20960	80	15920		
20	43	12010	65	12460	72	12610	77	12700	79	10700
25	22	7730	58	8200	67	8330	73	8410	76	8460
30			50	5760	62	5890	69	5960	73	6010
35			41	4180	57	4310	65	4380	70	4430
40			30	3070	51	3210	60	3280	66	3320
45			11	2220	44	2390	56	2460	63	2500
50					36	1750	51	1830	59	1870
55					27	1250	46	1330	55	1370
60					10	820	40	920	51	960
65										
70										
	460 LBS		270 LBS		210 LBS		170 LBS		140 LBS	
	690 LBS		410 LBS		310 LBS		250 LBS		210 LBS	

JIB LOAD RATINGS IN LBS WITH OUTRIGGERS PLACED AS SHOWN AND THE CRANE LEVEL

	FIXED JIB		TELESCOPIC JIB			
	LMI CODE #10		LMI CODE #11		LMI CODE #12	
OPERATING RADIUS FT	LOADED BOOM ANG	JIB LENGTH FOR ALL BOOM LENGTHS SEE WARNING NOTE 4	LOADED BOOM ANG	JIB LENGTH FOR ALL BOOM LENGTHS SEE WARNING NOTE 4	LOADED BOOM ANG	JIB LENGTH FOR ALL BOOM LENGTHS SEE WARNING NOTE 4
	∠	26 FT	∠	26 FT	∠	46 FT
10						
12						
15						
20						
25	79	5600	79	5400		
30	77	5300	77	5100	79	3400
35	75	4530	75	4230	77	3300
40	72	3410	72	3110	76	3200
45	70	2590	70	2280	74	2780
50	67	1950	67	1650	72	2130
55	65	1450	65	1140	69	1620
60	62	1040	62	740	67	1200
65	59	700			65	860
70					63	570
	DEDUCTIONS FOR STOWED FIXED JIB					
	DEDUCTIONS FOR STOWED TELESCOPIC JIB					

RANGE DIAGRAM
- FULLY RETRACTED OUTRIGGER CONFIGURATION -

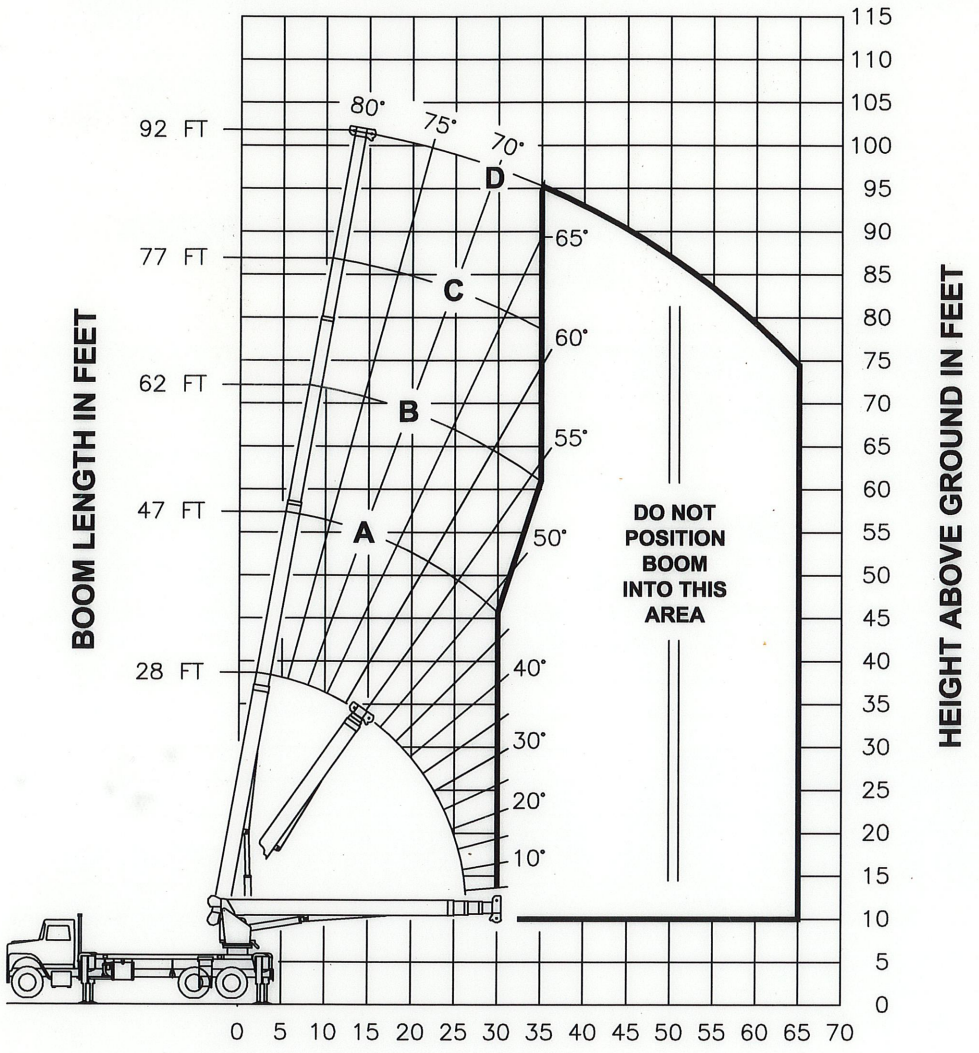

NOTE : **LIFTING PERSONNEL WITH CRANE IN THIS OUTRIGGER CONFIGURATION IS STRICTLY PROHIBITED. USE ONLY FULLY EXTENDED OUTRIGGER CONFIGURATION WHEN LIFTING PERSONNEL.**

ALLOWABLE LINE PULL

1 PART LINE	2 PART LINE	3 PART LINE	4 PART LINE	5 PART LINE	6 PART LINE	7 PART LINE	WARNING
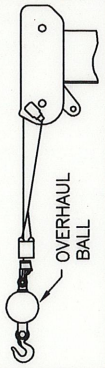	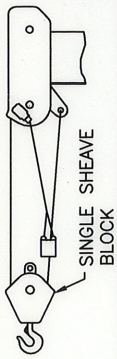	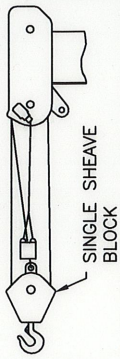	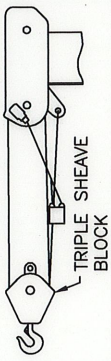		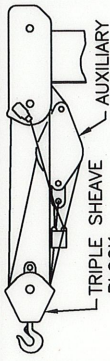	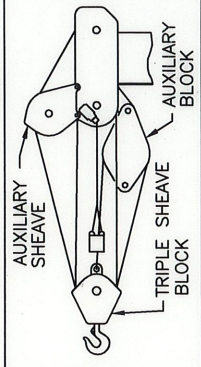	ANTI–TWO–BLOCK SYSTEM MUST BE IN GOOD OPERATING CONDITION BEFORE OPERATING CRANE. REFER TO THE OWNER'S MANUAL. KEEP AT LEAST 3 WRAPS OF LOAD LINE ON THE DRUM AT ALL TIMES.
8500 LBS	17000 LBS	25500 LBS	34000 LBS	42500 LBS	51000 LBS	56000 LBS	9/16" 6X25 IWRC (3.5:1 SF) – 29750 LBS MIN BREAKING STRENGTH
7400 LBS	14800 LBS	22200 LBS	29600 LBS	37000 LBS	44400 LBS	51800 LBS	9/16" ROT RESISTANT (5.0:1 SF) – 37000 LBS MIN BREAKING STRENGTH

AREA OF OPERATION

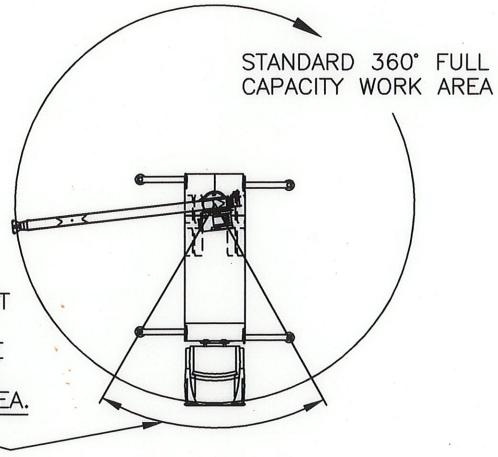

WARNING:
THE FRONT TIRES MUST BE IN CONTACT WITH THE GROUND, AND THE MACHINE LEVEL, WHEN OPERATING IN THIS AREA.

DEDUCTIONS FROM RATED LOADS FOR LOAD HANDLING DEVICES SUPPLIED BY MANITEX.

AUXILIARY BLOCK — 50 LBS
AUXILIARY SHEAVE — 50 LBS
OVERHAUL BALL — SEE OVERHAUL BALL MANUFACTURER NAMEPLATE
LOAD BLOCK — SEE BLOCK MANUFACTURER NAMEPLATE
HOSE REEL — 140 LBS
SWING AROUND JIB — SEE LOAD CHART

USE THIS CHART ONLY WHEN ALL OUTRIGGERS ARE FULLY RETRACTED

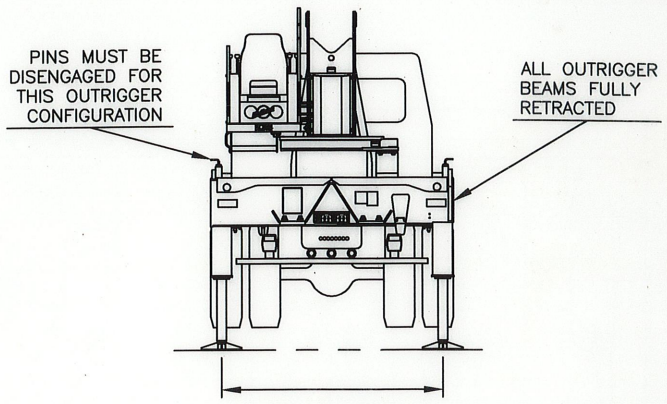

- FULLY RETRACTED OUTRIGGER CONFIGURATION -

MAIN BOOM LOAD RATINGS IN LBS WITH OUTRIGGERS PLACED AS SHOWN AND THE CRANE LEVEL

LMI CODE #13

OPERATING RADIUS FT	LOADED BOOM ANGLE	BOOM LENGTH AND MARKER	A		B		C		D	
	∠°	28 FT	∠°	47 FT	∠°	62 FT	∠°	77 FT	∠°	92 FT
5	79	56000								
8	73	23040								
10	69	14740	78	15170						
12	64	10410	76	10800	80	10940				
15	57	6760	72	7130	77	7260	80	7330		
20	43	3640	65	4000	72	4120	77	4190	79	4230
25	22	1940	58	2340	67	2450	73	2510	76	2550
30			50	1300	62	1410	69	1470	73	1510
35					57	700	65	760	70	800
	460 LBS		270 LBS		210 LBS		170 LBS		140 LBS	DEDUCTIONS FOR STOWED FIXED JIB
	690 LBS		410 LBS		310 LBS		250 LBS		210 LBS	DEDUCTIONS FOR STOWED TELESCOPIC JIB

NO JIBS ARE TO BE ERECTED IN THIS OUTRIGGER CONFIGURATION

LMI OPERATING CODES

SETTING	CRANE CONFIGURATION	OUTRIGGER CONFIGURATION
#1	MAIN BOOM	FULLY EXTENDED
#2	FIXED JIB	FULLY EXTENDED
#3	TELESCOPIC JIB–RETRACTED	FULLY EXTENDED
#4	TELESCOPIC JIB–EXTENDED	FULLY EXTENDED
#5	PERSONNEL LIFTING PLATFORM ON MAIN BOOM	FULLY EXTENDED
#6	PERSONNEL LIFTING PLATFORM ON FIXED JIB	FULLY EXTENDED
#7	PERSONNEL LIFTING PLATFORM ON TELESCOPIC JIB–RETRACTED	FULLY EXTENDED
#8	PERSONNEL LIFTING PLATFORM ON TELESCOPIC JIB–EXTENDED	FULLY EXTENDED
#9	MAIN BOOM	INTERMEDIATE
#10	FIXED JIB	INTERMEDIATE
#11	TELESCOPIC JIB–RETRACTED	INTERMEDIATE
#12	TELESCOPIC JIB–EXTENDED	INTERMEDIATE
#13	MAIN BOOM	FULLY RETRACTED

WARNING

1. THE OPERATOR MUST READ AND UNDERSTAND THE OWNER'S MANUAL BEFORE OPERATING THIS CRANE.

2. POSITIONING OR OPERATION OF CRANE BEYOND AREAS SHOWN ON THIS CHART IS NOT INTENDED OR APPROVED EXCEPT WHERE SPECIFIED IN OWNER'S MANUAL.

3. LOADED BOOM ANGLES AT SPECIFIED BOOM LENGTHS GIVE ONLY AN APPROXIMATION OF THE OPERATING RADIUS. THE BOOM ANGLE BEFORE LOADING SHOULD BE GREATER TO ACCOUNT FOR DEFLECTIONS. DO NOT EXCEED THE OPERATING RADIUS FOR RATED LOADS.

4. THE OPERATING RADIUS SHOWN IN THE JIB RATING CHART IS FOR FULLY EXTENDED BOOM ONLY. WHEN BOOM IS NOT FULLY EXTENDED, USE ONLY LOADED BOOM ANGLE TO DETERMINE LOAD RATING OF JIB.

5. FOR BOOM ANGLES NOT SHOWN ON JIB LOAD RATING CHART, USE RATING OF NEXT LOWER BOOM ANGLE.

6. FOR BOOM LENGTHS NOT SHOWN, USE RATING OF NEXT SHORTER OR LONGER BOOM LENGTH, WHICHEVER IS LESS. FOR RADII NOT SHOWN, USE RATING OF NEXT LONGER RADIUS.

7. CRANE LOAD RATINGS ON OUTRIGGERS ARE BASED ON FREELY SUSPENDED LOADS WITH THE MACHINE LEVELED AND STANDING ON A FIRM UNIFORM SUPPORTING SURFACE. NO ATTEMPT SHALL BE MADE TO MOVE A LOAD HORIZONTALLY ON THE GROUND IN ANY DIRECTION.

WARNING (CONTINUED)

8. PRACTICAL WORKING LOADS DEPEND ON SUPPORTING SURFACE, WIND, AND OTHER FACTORS AFFECTING STABILITY SUCH AS HAZARDOUS SURROUNDINGS, EXPERIENCE OF PERSONNEL, AND PROPER HANDLING, ALL OF WHICH MUST BE TAKEN INTO ACCOUNT BY THE OPERATOR.

9. THE MAXIMUM LOAD WHICH MAY BE TELESCOPED IS LIMITED BY HYDRAULIC PRESSURE, BOOM ANGLE, AND BOOM LUBRICATION. IT IS SAFE TO ATTEMPT TO TELESCOPE ANY LOAD WITHIN THE LIMITS OF THE LOAD RATING CHART.

10. LIFTING OFF THE MAIN BOOM POINT WHILE THE SWING AROUND JIB IS ERECTED IS NOT INTENDED OR APPROVED.

INFORMATION

1. DEDUCTIONS MUST BE MADE FROM RATED LOADS FOR STOWED JIB, OPTIONAL ATTACHMENTS, HOOKS, AND LOADBLOCKS (SEE DEDUCTION CHART). WEIGHTS OF SLINGS AND ALL OTHER LOAD HANDLING DEVICES SHALL BE CONSIDERED A PART OF THE LOAD.

2. LOAD RATINGS ABOVE THE HEAVY LINE ARE STRUCTURALLY LIMITED CAPACITIES. LOAD RATINGS BELOW THE HEAVY LINE ARE STABILITY LIMITED CAPACITIES AND DO NOT EXCEED 85% OF TIPPING.

DEFINITIONS

1. OPERATING RADIUS IS THE HORIZONTAL DISTANCE FROM THE AXIS OF ROTATION TO THE CENTER OF THE VERTICAL HOIST LINE OR TACKLE WITH LOAD APPLIED.

2. LOADED BOOM ANGLE AS SHOWN IN THE COLUMN HEADED BY $\measuredangle$, IS THE INCLUDED ANGLE BETWEEN THE HORIZONTAL AND LONGITUDINAL AXES OF THE BOOM BASE AFTER LIFTING RATED LOAD AT RATED RADIUS.