Load Rating Chart

Model 40124S

© Manitex 2000

NOTE: Additional copies of this Load Rating Chart can be purchased from your Manitex Distributor. When ordering, use the part number shown in the bottom left corner of this page.

RANGE DIAGRAM
- FULLY EXTENDED OUTRIGGER CONFIGURATION -

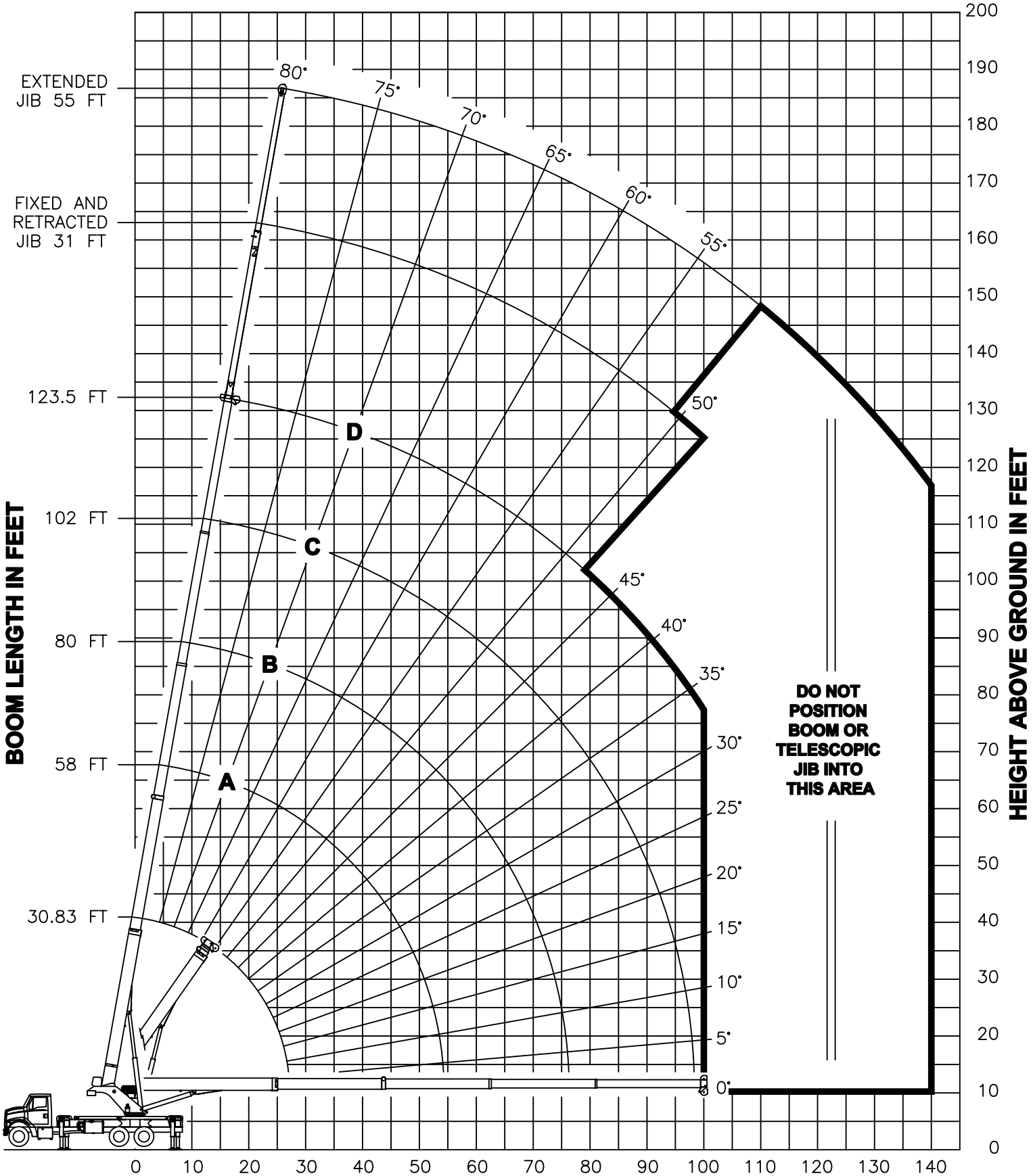

7-Ton Ball - 232 lbs

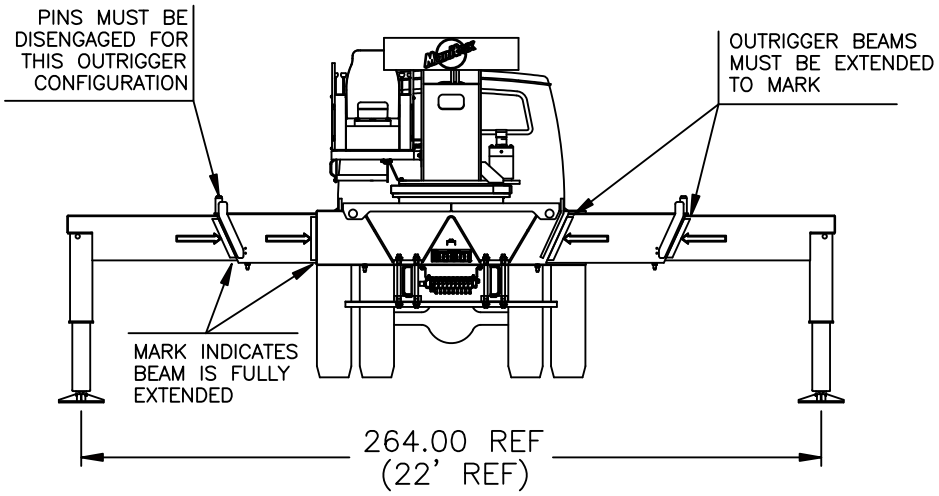

USE THIS CHART ONLY WHEN ALL OUTRIGGERS ARE FULLY EXTENDED

- FULLY EXTENDED OUTRIGGER CONFIGURATION -

LOAD RATINGS IN LBS WITH ALL OUTRIGGERS FULLY EXTENDED
LMI CODE #1

OPERATING RADIUS FT	LOADED BOOM ANGLE / BOOM LENGTH AND MARKER		A		B		C		D	
	∠	30.83 FT	∠	58 FT	∠	80 FT	∠	102 FT	∠	123.5 FT
5	75	80000								
8	69	60500								
10	64	52550								
12	60	46600	75	25000						
15	53	39600	73	25000	79	21500				
20	40	30300	67	25000	75	19700	80	14500		
25	22	23070	62	22840	71	18200	77	13500	80	8450
30			56	18670	67	16250	74	12820	78	8150
35			49	14450	63	14540	71	11380	75	7800
40			42	11190	59	11490	68	10160	72	7280
45			34	8820	54	9110	65	9250	70	6780
50			23	7030	50	7340	61	7480	67	6160
55					44	5970	58	6110	65	5540
60					39	4880	54	5020	62	5000
65					32	3980	50	4130	59	4200
70					24	3230	46	3390	56	3460
75					12	2580	42	2760	53	2830
80							37	2220	50	2300
85							32	1750	47	1840
90							25	1340	43	1430
95							17	970	40	1070
100									35	750
105										
110										
	450 LBS		240 LBS		180 LBS		140 LBS		120 LBS	
	840 LBS		450 LBS		330 LBS		260 LBS		210 LBS	

JIB LOAD RATINGS IN LBS
WITH ALL OUTRIGGERS FULLY EXTENDED

OPERATING RADIUS FT	FIXED JIB LMI CODE #32		TELESCOPIC JIB LMI CODE #7		TELESCOPIC JIB LMI CODE #13	
	LOADED BOOM ANG	JIB LENGTH FOR ALL BOOM LENGTHS SEE WARNING NOTE 4	LOADED BOOM ANG	JIB LENGTH FOR ALL BOOM LENGTHS SEE WARNING NOTE 4	LOADED BOOM ANG	JIB LENGTH FOR ALL BOOM LENGTHS SEE WARNING NOTE 4
	∠	31 FT	∠	30.5 FT	∠	55 FT
10						
12						
15						
20						
25						
30	80	4000	79.5	3300		
35	78	3850	77.5	3300	79.5	2450
40	76	3700	76	3300	78	2450
45	74	3550	74	3300	76.5	2450
50	72	3400	72	3300	75	2450
55	70	3250	70.5	3300	73	2450
60	68	3080	68.5	3300	71.5	2450
65	66	2910	66.5	3070	70	2420
70	64	2750	64.5	2750	68	2260
75	62	2600	62	2380	66	2110
80	60	2460	60	2050	64.5	1940
85	58	2260	58	1660	63	1750
90	55	1850	55.5	1250	61	1580
95	53	1490	53	890	59	1440
100	51	1170	50.5	570	57	1260
105	48	880			55	970
110	45	620			53	710
	FIXED		DEDUCTIONS FOR STOWED JIB			
	TELESCOPIC					

RANGE DIAGRAM
- INTERMEDIATE OUTRIGGER CONFIGURATION -

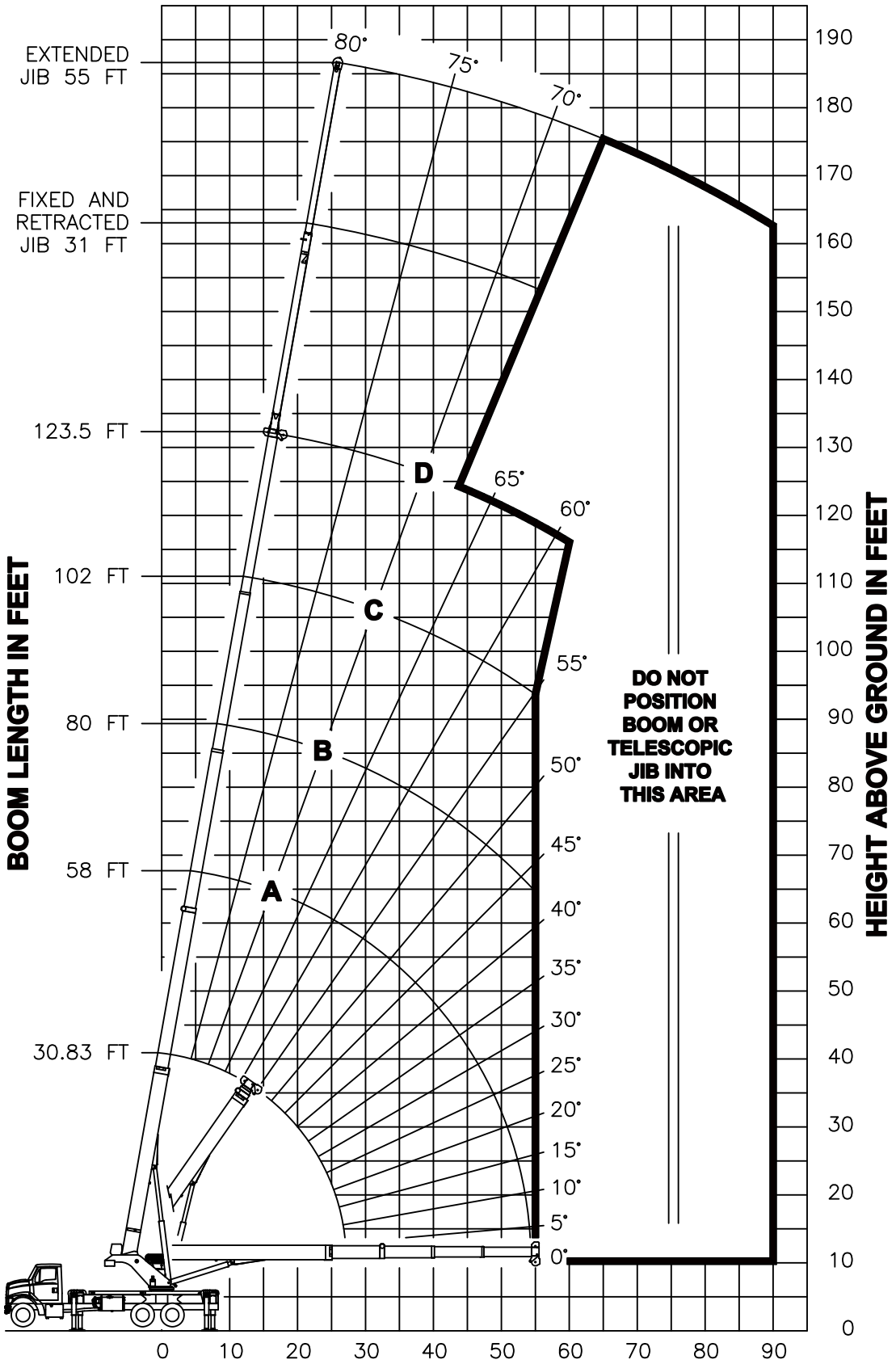

OPERATING RADIUS FROM CENTERLINE OF ROTATION IN FEET

NOTE : LIFTING PERSONNEL WITH CRANE IN THIS OUTRIGGER CONFIGURATION IS STRICTLY PROHIBITED. USE ONLY FULLY EXTENDED OUTRIGGER CONFIGURATION WHEN LIFTING PERSONNEL.

USE THIS CHART ONLY WHEN ALL OUTRIGGERS ARE IN THE INTERMEDIATE POSITION

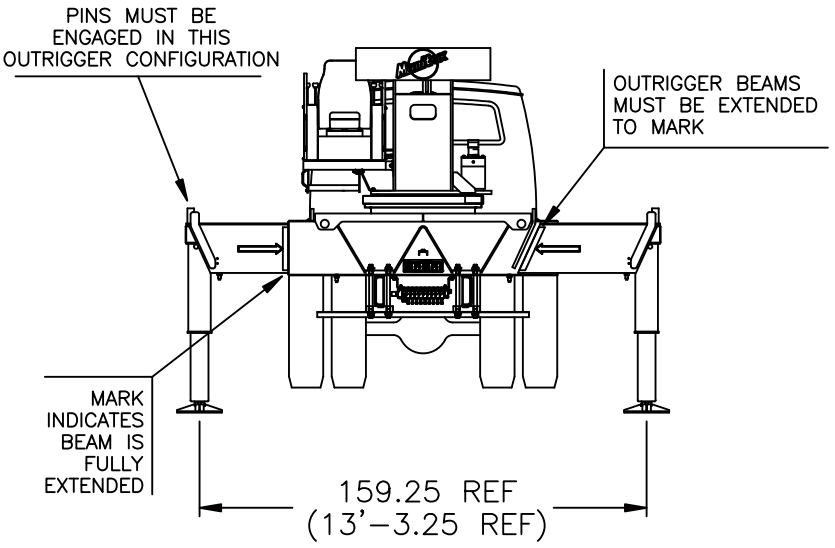

- INTERMEDIATE OUTRIGGER CONFIGURATION -

LOAD RATINGS IN LBS WITH ALL OUTRIGGERS FULLY EXTENDED
LMI CODE #4

OPERATING RADIUS FT	LOADED BOOM ANGLE / BOOM LENGTH AND MARKER		A		B		C		D	
	∠	30.83 FT	∠	58 FT	∠	80 FT	∠	102 FT	∠	123.5 FT
5	75	80000								
8	69	60500								
10	64	52550								
12	60	46340	75	25000						
15	53	27730	73	25000	79	21500				
20	40	15230	67	16300	75	16590	80	14500		
25	22	9460	62	10520	71	10780	77	10920	80	8450
30			56	7210	67	7450	74	7580	78	7650
35			49	5050	63	5300	71	5420	75	5480
40			42	3540	59	3780	68	3900	72	3960
45			34	2410	54	2660	65	2780	70	2840
50			23	1530	50	1800	61	1910	67	1980
55					44	1110	58	1230	65	1290
60									62	730
65										
	450 LBS		240 LBS		180 LBS		140 LBS		120 LBS	
	840 LBS		450 LBS		330 LBS		260 LBS		210 LBS	

JIB LOAD RATINGS IN LBS
WITH ALL OUTRIGGERS FULLY EXTENDED

OPERATING RADIUS FT	FIXED JIB		TELESCOPIC JIB			
	LMI CODE #34		LMI CODE #19		LMI CODE #22	
	LOADED BOOM ANG ∠	JIB LENGTH FOR ALL BOOM LENGTHS SEE WARNING NOTE 4	LOADED BOOM ANG ∠	JIB LENGTH FOR ALL BOOM LENGTHS SEE WARNING NOTE 4	LOADED BOOM ANG ∠	JIB LENGTH FOR ALL BOOM LENGTHS SEE WARNING NOTE 4
	∠	31 FT	∠	30.5 FT	∠	55 FT
10						
12						
15						
20						
25						
30	80	4000	79.5	3300		
35	78	3850	77.5	3300	79.5	2450
40	76	3700	76	3300	78	2450
45	74	3250	74	2630	76.5	2450
50	72	2370	72	1750	75	2450
55	70	1680	70.5	1060	73	1800
60	68	1110			71.5	1220
65	66	640			70	740
	FIXED		DEDUCTIONS FOR STOWED JIB			
	TELESCOPIC					

RANGE DIAGRAM
- FULLY RETRACTED OUTRIGGER CONFIGURATION -

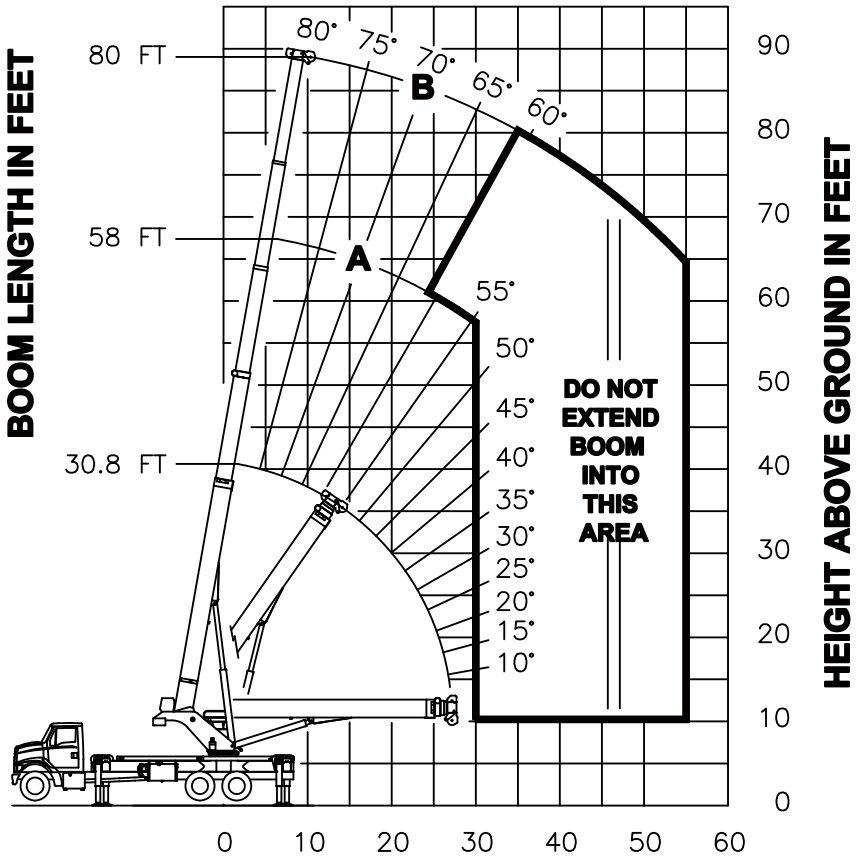

NOTE : LIFTING PERSONNEL WITH CRANE IN THIS OUTRIGGER CONFIGURATION IS STRICTLY PROHIBITED. USE ONLY FULLY EXTENDED OUTRIGGER CONFIGURATION WHEN LIFTING PERSONNEL.

USE THIS CHART ONLY WHEN ALL OUTRIGGERS ARE FULLY RETRACTED

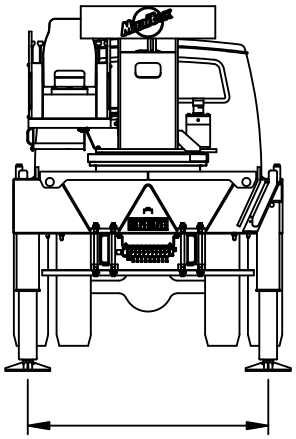

85.75 REF
(7'–1.75 REF)

-FULLY RETRACTED OUTRIGGER CONFIGURATION-

LOAD RATINGS IN LBS WITH ALL OUTRIGGERS FULLY RETRACTED
LMI CODE #5

OPERATING RADIUS FT	LOADED BOOM ANGLE / BOOM LENGTH AND MARKER		A		B	
	∠°	30.8 FT	∠°	58 FT	∠°	80 FT
5	75	80000				
8	69	33420				
10	64	21320				
12	60	14960	75	15960		
15	53	9570	73	10480	79	10740
20	40	4930	67	5800	75	6030
25	22	2390	62	3290	71	3510
30			56	1730	67	1950
35					63	870
	450 LBS		240 LBS		180 LBS	

NO JIBS ARE TO BE ERECTED IN THIS OUTRIGGER CONFIGURATION

DEDUCTIONS FOR STOWED JIBS

ALLOWABLE LINE PULL

1 PART LINE	2 PART LINE	3 PART LINE	4 PART LINE	5 PART LINE	6 PART LINE	7 PART LINE	8 PART LINE	**WARNING**
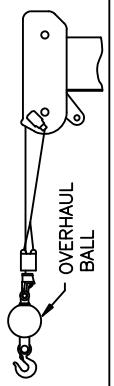	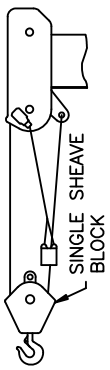	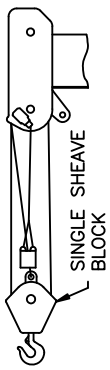	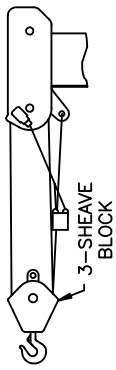	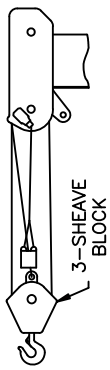	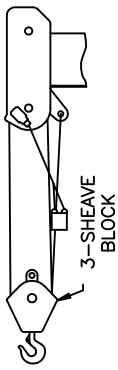	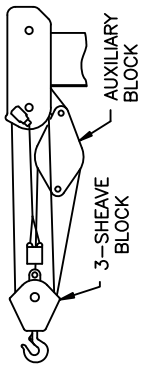	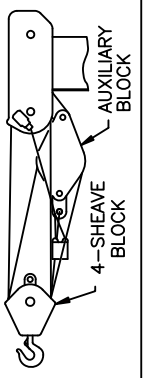	ANTI-TWO-BLOCK SYSTEM MUST BE IN GOOD OPERATING CONDITION BEFORE OPERATING CRANE. REFER TO THE OWNER'S MANUAL. KEEP AT LEAST 3 WRAPS OF LOAD LINE ON THE DRUM AT ALL TIMES.
9500 LBS	19000 LBS	28500 LBS	38000 LBS	47500 LBS	57000 LBS	66500 LBS	76000 LBS	5/8" ROT RESISTANT (5.0:1 SF) – 47500 LBS MIN BREAKING STRENGTH
10000 LBS	20000 LBS	30000 LBS	40000 LBS	50000 LBS	60000 LBS	70000 LBS	80000 LBS	5/8" 6 X 25 IWRC (3.5:1 SF) – 35000 LBS MIN BREAKING STRENGTH

AREA OF OPERATION

WARNING:

THE MACHINE MUST BE LEVEL AND THE FRONT TIRES IN CONTACT WITH THE GROUND OR THE OPTIONAL FRONT BUMPER STABILIZER MUST BE SET WHEN OPERATING IN THIS AREA.

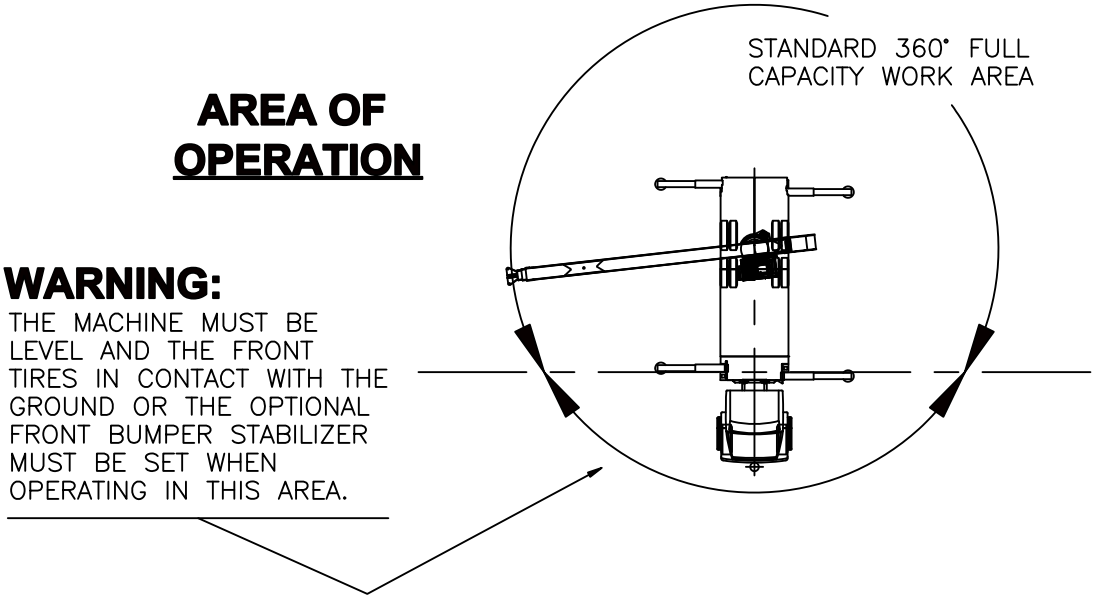

DEDUCTIONS FROM RATED LOADS FOR LOAD HANDLING DEVICES SUPPLIED BY MANITEX

AUXILIARY BLOCK ——————————————————— 50 LBS
OVERHAUL BALL ——————— SEE OVERHAUL BALL MANUFACTURER NAMEPLATE
LOAD BLOCK ——————————————— SEE BLOCK MANUFACTURER NAMEPLATE
HOSE REEL ——————————————————————— 260 LBS
SWING AROUND JIB (STOWED) ——————————— SEE LOAD CHART

LMI OPERATING CODES

SETTING	CRANE CONFIGURATION	OUTRIGGER CONFIGURATION
#1	MAIN BOOM	FULLY EXTENDED
#32	FIXED JIB	FULLY EXTENDED
#7	TELESCOPIC JIB–RETRACTED	FULLY EXTENDED
#13	TELESCOPIC JIB–EXTENDED	FULLY EXTENDED
#25	PERSONNEL LIFTING PLATFORM ON MAIN BOOM	FULLY EXTENDED
#33	PERSONNEL LIFTING PLATFORM ON FIXED JIB	FULLY EXTENDED
#26	PERSONNEL LIFTING PLATFORM ON TELESCOPIC JIB–RETRACTED	FULLY EXTENDED
#29	PERSONNEL LIFTING PLATFORM ON TELESCOPIC JIB–EXTENDED	FULLY EXTENDED
#4	MAIN BOOM	INTERMEDIATE
#34	FIXED JIB	INTERMEDIATE
#19	TELESCOPIC JIB–RETRACTED	INTERMEDIATE
#22	TELESCOPIC JIB–EXTENDED	INTERMEDIATE
#5	MAIN BOOM	FULLY RETRACTED

WARNING

1. THE OPERATOR MUST READ AND UNDERSTAND THE OWNER'S MANUAL BEFORE OPERATING THIS CRANE.

2. POSITIONING OR OPERATION OF CRANE BEYOND AREAS SHOWN ON THIS CHART IS NOT INTENDED OR APPROVED EXCEPT WHERE SPECIFIED IN OWNER'S MANUAL.

3. LOADED BOOM ANGLES AT SPECIFIED BOOM LENGTHS GIVE ONLY AN APPROXIMATION OF THE OPERATING RADIUS. THE BOOM ANGLE BEFORE LOADING SHOULD BE GREATER TO ACCOUNT FOR DEFLECTIONS. DO NOT EXCEED THE OPERATING RADIUS FOR RATED LOADS.

4. THE OPERATING RADIUS SHOWN IN THE JIB RATING CHART IS FOR FULLY EXTENDED BOOM ONLY. WHEN BOOM IS NOT FULLY EXTENDED, USE ONLY LOADED BOOM ANGLE TO DETERMINE LOAD RATING OF JIB.

5. FOR BOOM ANGLES NOT SHOWN ON JIB LOAD RATING CHART, USE RATING OF NEXT LOWER BOOM ANGLE.

6. FOR BOOM LENGTHS NOT SHOWN, USE RATING OF NEXT SHORTER OR LONGER BOOM LENGTH, WHICHEVER IS LESS. FOR RADII NOT SHOWN, USE RATING OF NEXT LONGER RADIUS.

7. CRANE LOAD RATINGS ON OUTRIGGERS ARE BASED ON FREELY SUSPENDED LOADS WITH THE MACHINE LEVELED AND STANDING ON A FIRM UNIFORM SUPPORTING SURFACE. NO ATTEMPT SHALL BE MADE TO MOVE A LOAD HORIZONTALLY ON THE GROUND IN ANY DIRECTION.

WARNING (CONTINUED)

8. PRACTICAL WORKING LOADS DEPEND ON SUPPORTING SURFACE, WIND, AND OTHER FACTORS AFFECTING STABILITY SUCH AS HAZARDOUS SURROUNDINGS, EXPERIENCE OF PERSONNEL, AND PROPER HANDLING, ALL OF WHICH MUST BE TAKEN INTO ACCOUNT BY THE OPERATOR.

9. THE MAXIMUM LOAD WHICH MAY BE TELESCOPED IS LIMITED BY HYDRAULIC PRESSURE, BOOM ANGLE, AND BOOM LUBRICATION. IT IS SAFE TO ATTEMPT TO TELESCOPE ANY LOAD WITHIN THE LIMITS OF THE LOAD RATING CHART.

10. LIFTING OFF THE MAIN BOOM POINT WHILE THE SWING AROUND JIB IS ERECTED IS NOT INTENDED OR APPROVED.

INFORMATION

1. DEDUCTIONS MUST BE MADE FROM RATED LOADS FOR STOWED JIB, OPTIONAL ATTACHMENTS, HOOKS, AND LOAD BLOCKS (SEE DEDUCTION CHART). WEIGHTS OF SLINGS AND ALL OTHER LOAD HANDLING DEVICES SHALL BE CONSIDERED A PART OF THE LOAD.

2. LOAD RATINGS ABOVE THE HEAVY LINE ARE STRUCTURALLY LIMITED CAPACITIES. LOAD RATINGS BELOW THE HEAVY LINE ARE STABILITY LIMITED CAPACITIES AND DO NOT EXCEED 85% OF TIPPING.

DEFINITIONS

1. OPERATING RADIUS IS THE HORIZONTAL DISTANCE FROM THE AXIS OF ROTATION TO THE CENTER OF THE VERTICAL HOIST LINE OR TACKLE WITH LOAD APPLIED.

2. LOADED BOOM ANGLE AS SHOWN IN THE COLUMN HEADED BY $\angle^{\circ}$, IS THE INCLUDED ANGLE BETWEEN THE HORIZONTAL AND LONGITUDINAL AXES OF THE BOOM BASE AFTER LIFTING RATED LOAD AT RATED RADIUS.