General Dimensions

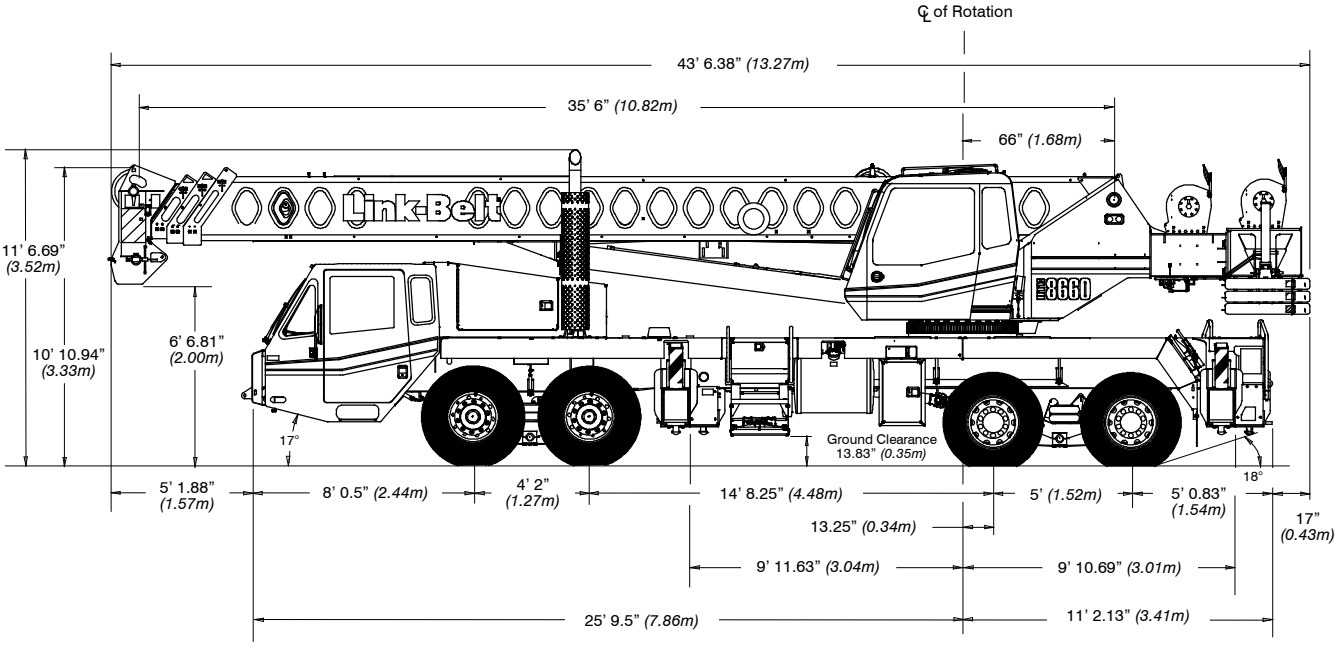

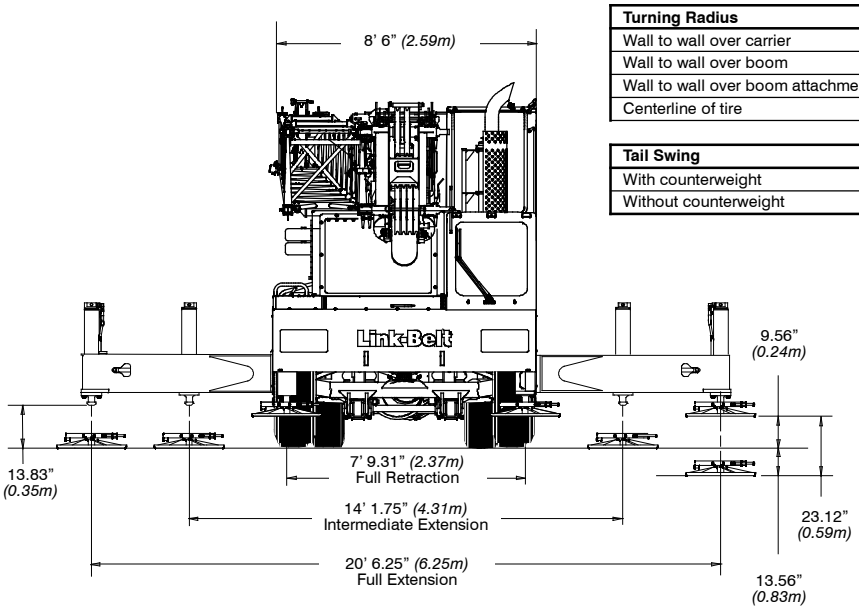

Turning Radius	English	*Metric*
Wall to wall over carrier	44' 1"	*13.4m*
Wall to wall over boom	45' 6"	*13.9m*
Wall to wall over boom attachment	46' 11"	*14.3m*
Centerline of tire	38' 7"	*11.8m*

Tail Swing	English	*Metric*
With counterweight	12' 8.5"	*3.9m*
Without counterweight	12' 5.25"	*3.8m*

Working Range Diagram

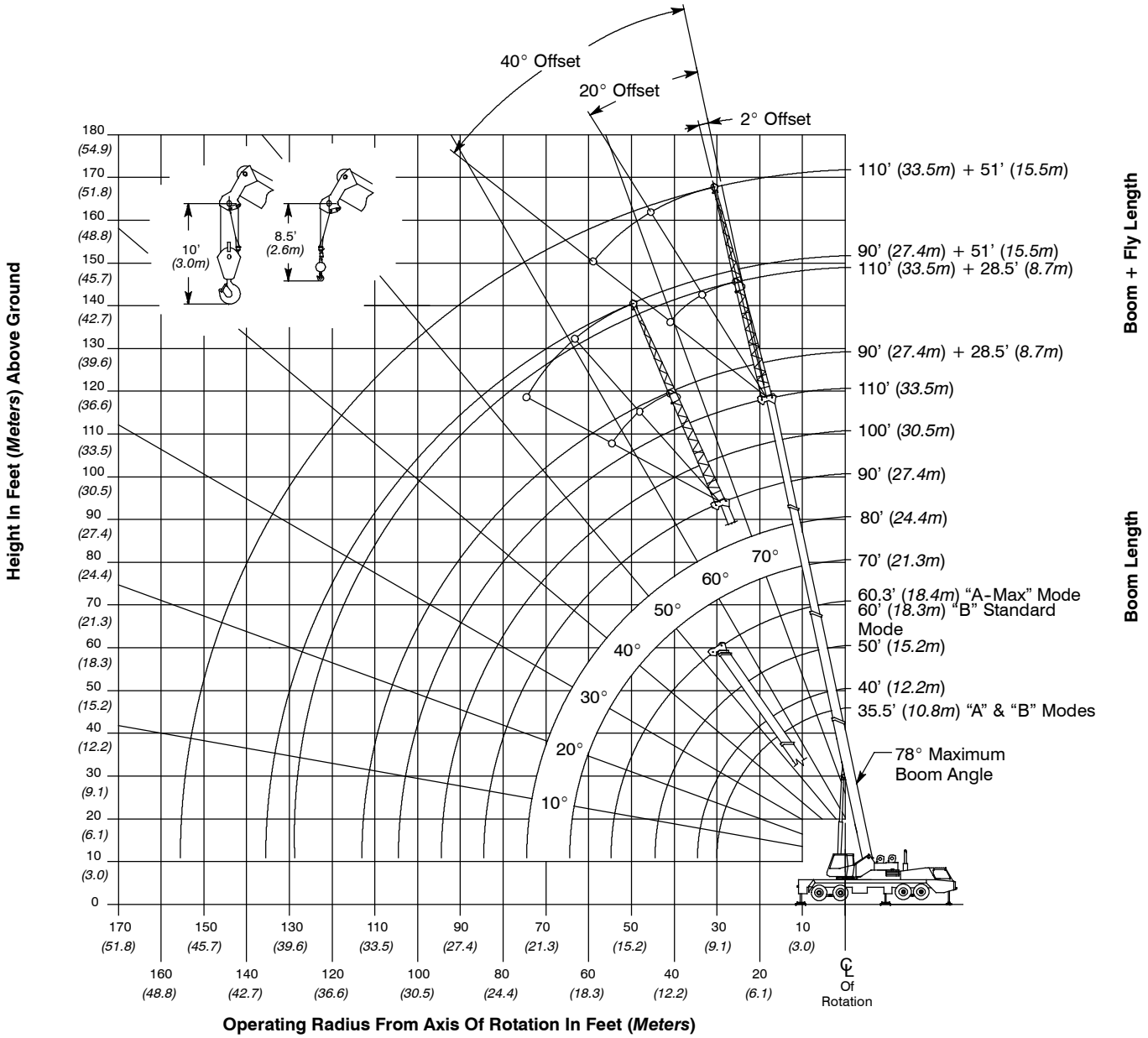

Note: Boom and fly geometry shown are for unloaded condition and crane standing level on firm supporting surface. Boom deflection, subsequent radius, and boom angle change must be accounted for when applying load to hook.

⚠ WARNING

Do Not Lower The Boom Below The Minimum Boom Angle For No Load Stability As Shown In The Lift Charts For The Boom Lengths Given. Loss Of Stability Will Occur Causing A Tipping Condition.

Boom Extend Modes

Boom Mode “A” (A – Max)
Only inner mid section telescopes

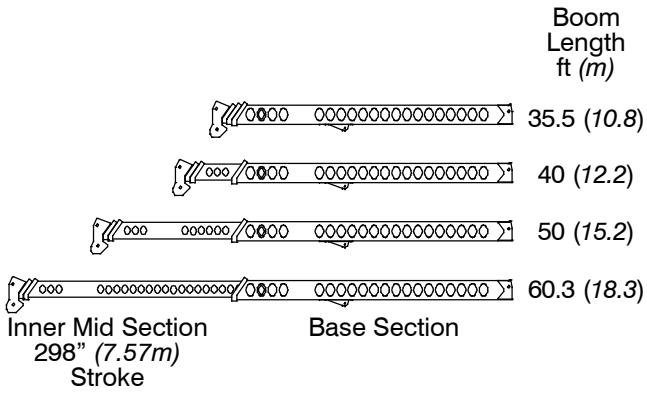

Boom Mode “B” (Standard)
Inner mid, outer mid, and tip sections telescope simultaneously

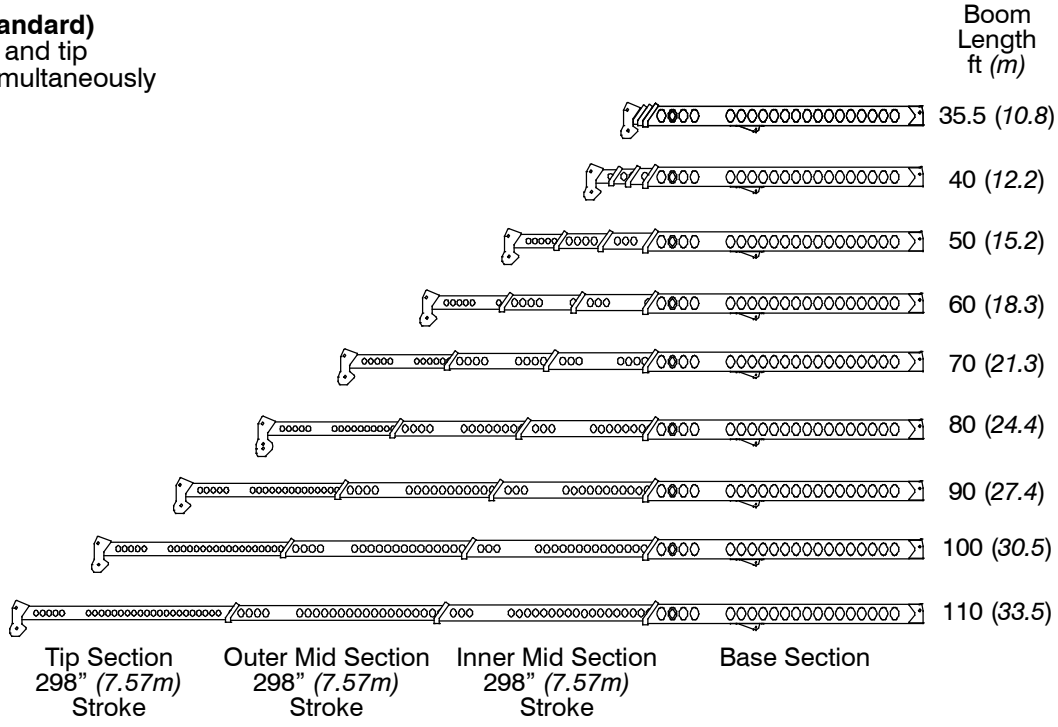

Main Boom Lift Capacity Charts – Optional

15,100 lb Counterweight -- Fully Extended Outriggers -- 360° Rotation
(All Capacities Are Listed In Pounds)

Radius (ft)	Boom Length (ft)									Radius (ft)
	35.5	40	50	60	70	80	90	100	110	
7	120,000*									7
10	100,000	80,900	72,800							10
12	76,000	73,200	65,800	50,900	37,900					12
15	65,800	63,600	57,700	47,300	37,900	35,400				15
20	53,400	52,000	47,500	39,300	37,900	34,700	28,900			20
25	41,900	41,700	40,300	37,900	37,900	34,300	28,300	24,000	19,500	25
30		32,900	33,600	33,900	32,900	30,400	24,900	22,600	19,500	30
35			25,400	25,800	25,900	26,100	22,100	20,100	18,500	35
40			19,900	20,400	20,600	20,700	19,800	18,000	16,500	40
45				16,500	16,700	16,800	16,900	16,200	14,700	45
50				13,500	13,800	13,900	14,000	14,100	13,300	50
55					11,500	11,700	11,800	11,800	11,900	55
60					9,700	9,900	10,000	10,100	10,200	60
65						8,400	8,600	8,600	8,700	65
70						7,100	7,300	7,400	7,500	70
75							6,200	6,300	6,400	75
80							5,300	5,400	5,500	80
85								4,600	4,700	85
90								4,000	4,000	90
95									3,400	95
100									2,900	100

* Special Conditions Or Wire Rope Required

Hook Block = 1,014 lbs.
Ball = 385 lbs.

This information is not for crane operation. Operator must refer to the in – cab information for crane operation. Rated lifting capacities shown on fully extended outriggers do not exceed 85% of the tipping loads and on tires do not exceed 75% of the tipping loads.