Link-Belt®
CONSTRUCTION EQUIPMENT

HTC – 8670

CRANE RATING MANUAL
4 – SECTION POWER BOOM

NUMBER F2I8-8731

For Replacement, Order Part Number: F2P0048
(071296)

® Link-Belt is a [illegible] Limited

HTC-8670 — Table of Contents

4-Section Power Boom — Fully Extended Outriggers, All Counterweight Configurations

Front Matter

Original Table of Contents 2
Operating Instructions 3
Boom Mode "A" & "B" 5
Winch Performance / Wire Rope Strength 6
Working Areas / Hydraulic Circuit Pressure Settings 7
Capacity Deductions / Tire Inflation / Pontoon Loadings / Outrigger Spread 8

Counterweight Configurations

0# Counterweight

Working Range Diagram 9
Lifting Capacities – Boom Mode "A" (38 – 63.6 Ft Boom) 10
Lifting Capacities – Boom Mode "B" (38 – 115 Ft Boom) 12
Lifting Capacities – 95 Ft Main Boom + 36.5 Ft Offset Fly 14
Lifting Capacities – 95 Ft Main Boom + 61 Ft Offset Fly 15
Lifting Capacities – 115 Ft Main Boom + 36.5 Ft Offset Fly 16
Lifting Capacities – 115 Ft Main Boom + 61 Ft Offset Fly 17

4,000# Counterweight

Working Range Diagram 19
Lifting Capacities – Boom Mode "A" (38 – 63.6 Ft Boom) 20
Lifting Capacities – Boom Mode "B" (38 – 115 Ft Boom) 22
Lifting Capacities – 95 Ft Main Boom + 36.5 Ft Offset Fly 24
Lifting Capacities – 95 Ft Main Boom + 61 Ft Offset Fly 25
Lifting Capacities – 115 Ft Main Boom + 36.5 Ft Offset Fly 26
Lifting Capacities – 115 Ft Main Boom + 61 Ft Offset Fly 27

8,000# Counterweight

Working Range Diagram 29
Lifting Capacities – Boom Mode "A" (38 – 63.6 Ft Boom) 30
Lifting Capacities – Boom Mode "B" (38 – 115 Ft Boom) 32
Lifting Capacities – 95 Ft Main Boom + 36.5 Ft Offset Fly 34
Lifting Capacities – 95 Ft Main Boom + 61 Ft Offset Fly 35
Lifting Capacities – 115 Ft Main Boom + 36.5 Ft Offset Fly 36
Lifting Capacities – 115 Ft Main Boom + 61 Ft Offset Fly 37

12,000# Counterweight

Working Range Diagram 39
Lifting Capacities – Boom Mode "A" (38 – 63.6 Ft Boom) 40
Lifting Capacities – Boom Mode "B" (38 – 115 Ft Boom) 42
Lifting Capacities – 95 Ft Main Boom + 36.5 Ft Offset Fly 44
Lifting Capacities – 95 Ft Main Boom + 61 Ft Offset Fly 45
Lifting Capacities – 115 Ft Main Boom + 36.5 Ft Offset Fly 46
Lifting Capacities – 115 Ft Main Boom + 61 Ft Offset Fly 47

16,000# Counterweight

Working Range Diagram 49
Lifting Capacities – Boom Mode "A" (38 – 63.6 Ft Boom) 50
Lifting Capacities – Boom Mode "B" (38 – 115 Ft Boom) 52
Lifting Capacities – 95 Ft Main Boom + 36.5 Ft Offset Fly 54
Lifting Capacities – 95 Ft Main Boom + 61 Ft Offset Fly 55
Lifting Capacities – 115 Ft Main Boom + 36.5 Ft Offset Fly 56
Lifting Capacities – 115 Ft Main Boom + 61 Ft Offset Fly 57

Table Of Contents

Page	Contents
3	Operating Instructions
5	Boom Mode "A" & "B"
6	Winch Performance
6	Wire Rope Strength
7	Working Areas
7	Hydraulic Circuit Pressure Settings
8	Capacity Deductions For Auxiliary Load Handling Equipment
8	Tire Inflation
8	Pontoon Loadings
8	Outrigger Spread
	Fully Extended Outriggers
9	Working Range Diagram, 0# CTWT
10–18	Lifting Capacities, 0# CTWT
19	Working Range Diagram, 4,000# CTWT
2–28	Lifting Capacities, 4,000# CTWT
29	Working Range Diagram, 8,000# CTWT
30–38	Lifting Capacities, 8,000# CTWT
39	Working Range Diagram, 12,000# CTWT
40–48	Lifting Capacities, 12,000# CTWT
49	Working Range Diagram, 16,000# CTWT
50–58	Lifting Capacities, 16,000# CTWT
	Intermediate Extended Outriggers
59	Working Range Diagram, 4,000# CTWT
60–64	Lifting Capacities, 4,000# CTWT
65	Working Range Diagram, 8,000# CTWT
66–70	Lifting Capacities, 8,000# CTWT
71	Working Range Diagram, 12,000# CTWT
72–78	Lifting Capacities, 12,000# CTWT
79	Working Range Diagram, 16,000# CTWT
80–86	Lifting Capacities, 16,000# CTWT
	Fully Retracted Outriggers
87	Working Range Diagram, 8,000# CTWT
88–90	Lifting Capacities, 8,000# CTWT
91	Working Range Diagram, 12,000# CTWT
92–94	Lifting Capacities, 12,000# CTWT
	On Tires
95	Working Range Diagram, 8,000# CTWT
96–100	Lifting Capacities, 8,000# CTWT
101	Working Range Diagram, 12,000# CTWT
102–106	Lifting Capacities, 12,000# CTWT
107	Working Range Diagram, 16,000# CTWT
108–111	Lifting Capacities, 16,000# CTWT
112	Patent Information

⚠ WARNING

READ AND UNDERSTAND THE OPERATOR'S AND SAFETY MANUAL AND THE FOLLOWING INSTRUCTIONS AND CHART VALUES BEFORE OPERATING THE CRANE. OPERATION WHICH DOES NOT FOLLOW THESE INSTRUCTIONS MAY RESULT IN AN ACCIDENT.

OPERATING INSTRUCTIONS

GENERAL:

1. Rated lifting capacities in pounds as shown on lift charts pertain to this crane as originally manufactured and normally equipped. Modifications to the crane or use of optional equipment other than that specified can result in a reduction of capacity.
2. Construction equipment can be dangerous if improperly operated or maintained. Operation and maintenance of this crane must be in compliance with the information in the Operator's, Parts and Safety Manuals supplied with this crane. If these manuals are missing, order replacements through the distributor.
3. The operator and other personnel associated with this crane shall read and fully understand the latest applicable American National Standards Institute (ANSI) safety standards for cranes.
4. The maximum allowable lifting capacities are based on crane standing level on firm supporting surface.

SET UP:

1. The crane shall be leveled on a firm supporting surface. Depending on the nature of the supporting surface, it may be necessary to have structural supports under the outrigger pontoons or tires to spread the load to a larger bearing surface.
2. When making lifts on outriggers, all tires must be free of supporting surface. All outrigger beams must be extended to the same length; fully retracted, intermediate extended, or fully extended. The front bumper outrigger must be properly extended.
3. When operating on fully retracted outriggers, do not exceed 64° maximum boom angle with 16,000# counterweight, or 71° maximum boom angle with 12,000# counterweight. Loss of backward stability will occur causing a backward tipping condition.
4. When making lifts on tires, they must be inflated to the recommended pressure. (See Operation note 18 and Tire Inflation.)
5. Before swinging boom to over side position on tires, or on fully retracted outriggers where capacities are not published, boom sections must be fully retracted and 45° boom angle maintained.
6. For required parts of line, see Wire Rope Strength and Winch Performance.

OPERATION:

1. Rated lifting capacities at rated radius shall not be exceeded. Do not tip the crane to determine allowable loads. For concrete bucket operation, weight of bucket and load shall not exceed 80% of rated lifting capacities. For clamshell bucket operation, weight of bucket and bucket contents is restricted to a maximum weight of 7,000 pounds or 80% of rated lifting capacity, whichever is less. For magnet operation, weight of magnet and load is restricted to a maximum weight of 7,000 pounds or 80% of rated lifting capacity, whichever is less. For clamshell and magnet operation, maximum boom length is restricted to 55 feet and the boom angle is restricted to a minimum of 35 degrees. Lifts with either fly erected or boom in mode "A" are prohibited for both clam and magnet operation.
2. The crane capacities shown on fully extended outriggers do not exceed 85% of the tip load. The crane capacities shown on intermediate extended or fully retracted outriggers are determined by the formula, rated load = (tipping load – 0.1 X load factor)/1.25. The crane capacities shown on tires do not exceed 75% of the tip load. Tipping loads are determined by SAE crane stability test code J–765.
3. The crane capacities in the shaded areas above the bold lines, are based on structural strength or hydraulic limitations and have been tested to meet minimum requirements of SAE J–1063 cantilevered boom crane structures–method of test. The crane capacities below the bold lines are based on stability ratings. Some capacities are limited by a maximum obtainable 78° boom angle.
4. Rated lifting capacities include the weight of the hook block, slings, bucket, magnet and auxiliary lifting devices. Their weights must be subtracted from the listed rated capacity to obtain the net load which can be lifted. Also, see Capacity Deductions For Auxiliary Load Handling Equipment.
5. Rated lifting capacities are based on freely suspended loads. No attempt shall be made to move a load horizontally on the ground in any direction.
6. Rated lifting capacities are for lift crane service only.
7. Do not operate at any radii or boom lengths (minimum or maximum) where capacities are not listed. At these positions, the crane can tip or cause boom failure.

8. The maximum loads which can be telescoped are not definable because of variation in loadings and crane maintenance, but it is permissible to attempt retraction and extension within the limits of the applicable load rating chart.
9. For main boom capacities when either boom length and/or radius are between values listed, proceed as follows:
   a. For boom lengths not listed, use rating for next longer boom length or next shorter boom length, whichever is smaller.
   b. For load radii not listed, use rating for next larger radius.
10. The user shall operate at reduced ratings to allow for adverse job conditions, such as: soft or uneven ground, out of level conditions, wind, side loads, pendulum action, jerking or sudden stopping of loads, hazardous conditions, experience of personnel, two machine lifts, traveling with loads, electrical wires, etc. Side load on boom or fly is extremely dangerous.
11. When making lifts with auxiliary head machinery, the effective length of the boom increases by 2 feet.
12. Power sections of boom must be extended in accordance with boom mode "A" or "B". In boom mode "B" all power sections must be extended or retracted equally.
13. Rated lifting capacities are based on correct reeving. Deduction must be made for excessive reeving. Any reeving over minimum required (see wire rope strength) is considered excessive and must be accounted for when making lifts. Use working range diagram to estimate the extra feet of rope then deduct 1 lb for each extra foot of wire rope before attempting to lift a load.
14. The loaded boom angle combined with the boom length give only an approximation of the operating radius. The boom angle, before loading, should be greater to account for deflection. For main boom capacities, the loaded boom angle is for reference only. For fly capacities, the load radius is for reference only.
15. For fly capacities with main boom length less than 115 ft. and greater than 95 ft., the rated loads are determined by the boom angle using the 115 ft. boom and fly chart. For angles not shown use the next lower boom angle to determine the allowable capacity.
16. For fly capacities with main boom length less than 95 ft., the rated loads are determined by the boom angle only using the 95 ft. boom and fly chart. For angles not shown, use the next lower boom angle to determine the allowable capacity.
17. The 38 ft. boom length capacities are based on boom fully retracted. If the boom is not fully retracted, do not exceed capacities shown for the 45 ft. boom length.
18. Crane capacities on tires depend on tire capacity, condition of tires, and tire air pressure. On tire picks require lifting from main boom head only on a smooth and level surface. Pick and carry operations are restricted to a maximum speed of 1 MPH. The boom must be centered over the rear of the crane with two position travel swing lock engaged and the load must be restrained from swinging. Lifts with either fly erected on tires are prohibited. For correct tire pressure see Tire Inflation.

DEFINITIONS:

1. Load Radius: Horizontal distance from a projection of the axis of rotation to the supporting surface before loading to the center of the vertical hoist line or tackle with load applied.
2. Loaded Boom Angle: The angle between the boom base section and horizontal after lifting the load at the rated radius.
3. Working Area: Area measured in a circular arc about the center line of rotation as shown on the working area diagram.
4. Freely Suspended Load: Load hanging free with no direct external force applied except by the hoist line.
5. Side Load: Horizontal side force applied to the lifted load either on the ground or in the air.
6. No Load Stability Limit – The stability limit radius is the radius beyond which it is not permitted to position the boom plus load handling equipment, because the crane can overturn without any load on the hook.
7. Load Factor: Load applied at the boom tip which gives the same moment effect as the boom mass.

Boom Mode "A"

Only inner mid section telescopes.

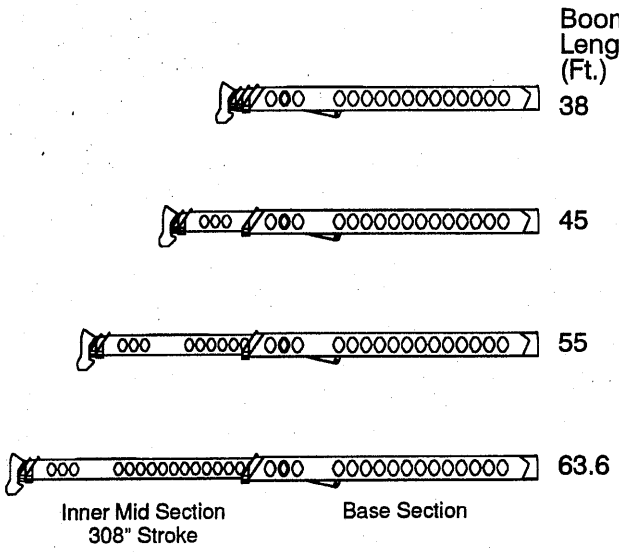

Boom Mode "B"

Inner mid, outer mid and tip sections telescope simultaneously.

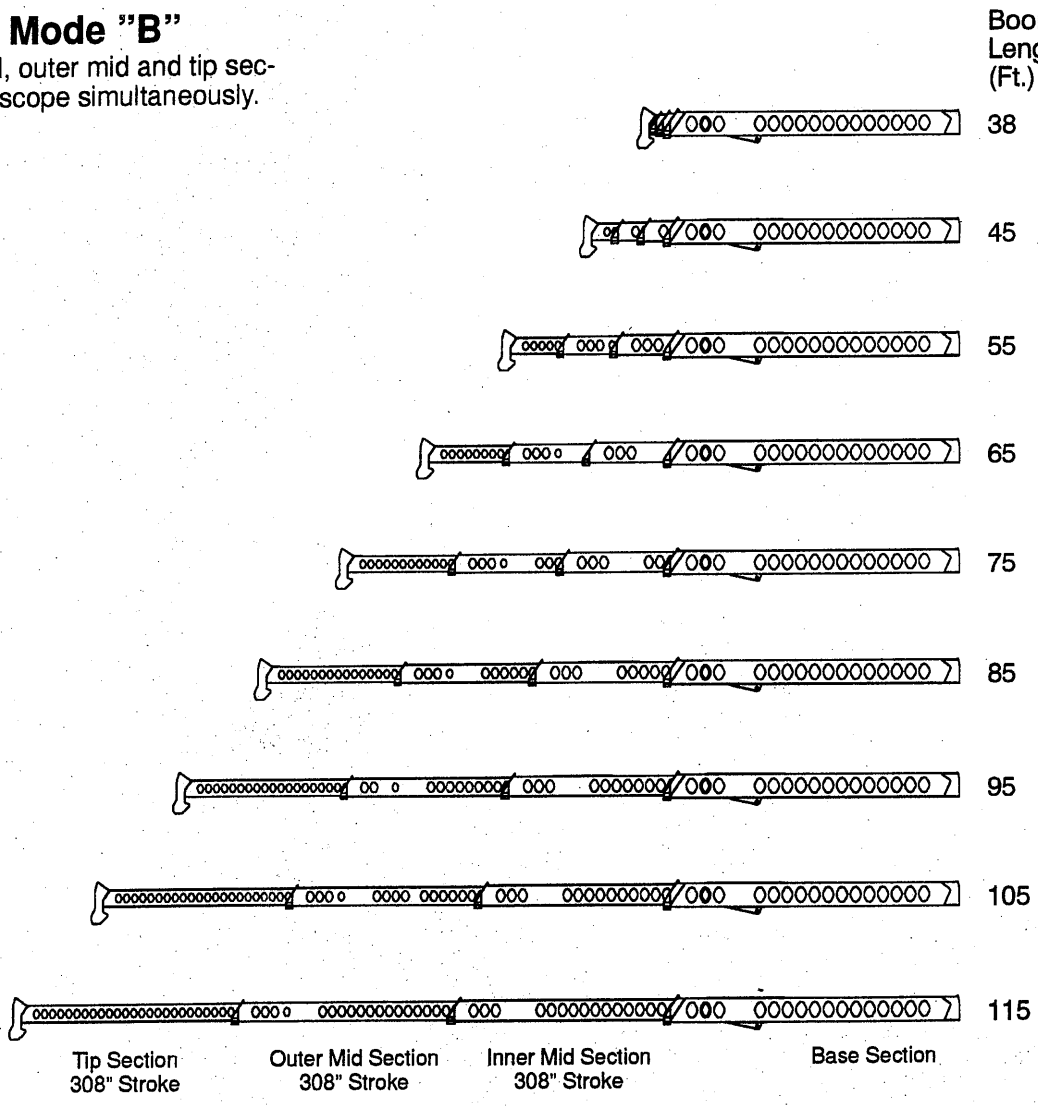

WINCH PERFORMANCE

Winch Line Pulls			Drum Rope Capacity (Ft.)	
	Two Speed Winch			
Wire Rope Layer	Low Speed Available Lbs.*	High Speed Available Lbs.	Layer	Total
1	16,805	8,290	110	110
2	15,620	7,710	118	228
3	14,590	7,200	126	354
4	13,690	6,760	134	488
5	12,890	6,360	143	631
6	12,190	6,020	151	782

*Maximum lifting capacity: Type RB Rope=12,920 Type ZB Rope=15,600

WIRE ROPE STRENGTH

Maximum Lifting Capacities Based On Wire Rope Strength			
Parts of Line	3/4" Type RB	3/4" Type ZB	Notes
1	12,920*	15,600	Capacities shown are in pounds and working loads must not exceed the ratings on the capacity charts in the Crane Rating Manual. Study Operator's Manual for wire rope inspection procedures. *Use of swivel end with 1 part of line is not recommended.
2	25,840	31,200	
3	38,760	46,800	
4	51,680	62,400	
5	64,600	78,000	
6	77,520	93,600	
7	90,440	109,200	
8	103,360	124,800	
9	116,280	140,400	
10	129,200	156,000	

LBCE	DESCRIPTION
TYPE RB	18 X 19 Rotation Resistant – Extra Improved Plow Steel – Preformed Right Lay – Regular Lay, Swaged
TYPE ZB	36 X 7 Rotation Resistant – Extra Improved Plow Steel – Right Lay – Regular Lay

WORKING AREAS

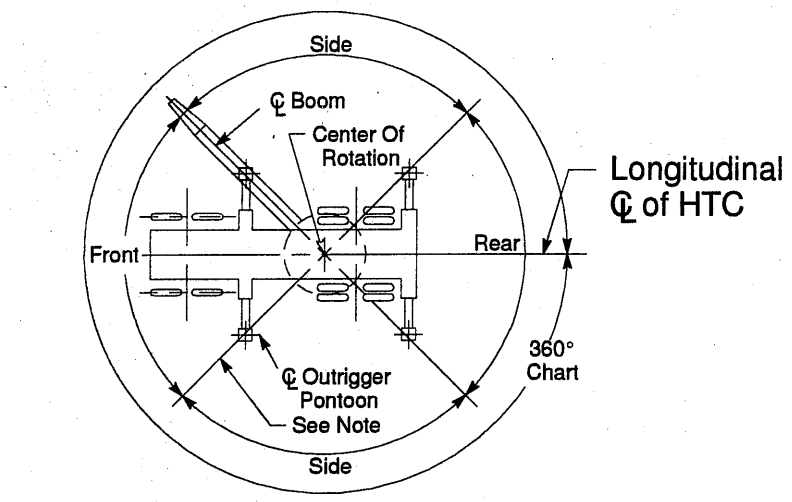

HTC On Outriggers

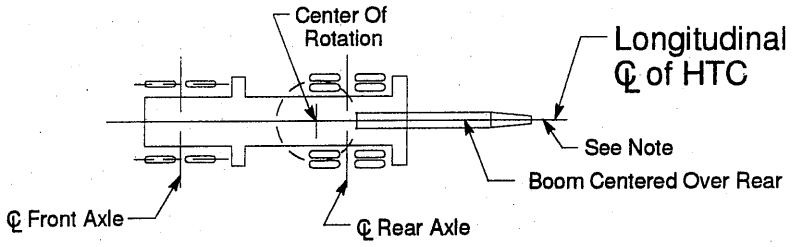

HTC On Tires

Note: These Lines Determine The Limiting Position Of Any Load For Operation Within Working Areas Indicated.

HYDRAULIC CIRCUIT PRESSURE SETTINGS

Function	Pressure (PSI)
Front And Rear Winch	3,500
Outriggers	3,000
Boom Hoist	3,500
Telescope	3,000
Swing	1,500
Steering	1,600
Bumper Outrigger	650
Pilot Control	500
Counterweight Removal	1,700
Swing Park Brake Release	250

CAPACITY DEDUCTIONS FOR AUXILIARY LOAD HANDLING EQUIPMENT

Load Handling Equipment	Weight (Lbs.)
Auxiliary Head Attached	150
70 Ton Hook Block 5 Sheave (See Hook Block For Actual Weight)	1,400
40 Ton Hook Block 4 Sheave (See Hook Block For Actual Weight)	720
8.5 Ton Hook Ball (See Hook Ball For Actual Weight)	360
Lifting From Main Boom With:	
24.5 Ft. Fly Tip Stowed On Boom Base	300
36.5 Ft. Offset Fly Stowed On Boom Base	900
36.5 Ft. Offset Fly Erected But Not Used	6,100
61 Ft. Offset Fly Stowed On Boom Base	1,200
61 Ft. Offset Fly Erected But Not Used	7,600
Lifting From 36.5 Ft. Offset Fly With:	
24.5 Ft. Fly Tip Stowed On Boom Base	300
24.5 Ft. Tip Erected But Not Used	**PROHIBITED**
24.5 Ft. Tip Stowed On 36.5 Ft. Offset Fly	**PROHIBITED**
Note: Capacity deductions are for Link–Belt supplied equipment only.	

TIRE INFLATION

Tire Size	Operation	Tire Pressure (PSI)
12 R 22.5	1 mph Stationary	120 120

PONTOON LOADINGS

Maximum Pontoon Load:	Maximum Pontoon Ground Bearing Pressure:
97,400 Lbs.	215 PSI

OUTRIGGER SPREAD

Position	Distance
Fully Retracted	93" – (7'–9")
Intermediate Extended	175" – (14'–7")
Fully Extended	288" – (24'–0")

WORKING RANGE DIAGRAM

Working Range Diagram
On Fully Extended Outriggers

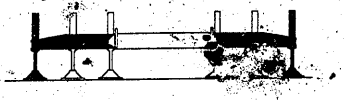

0# Counterweight

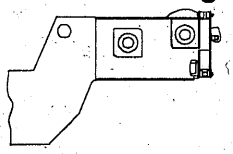

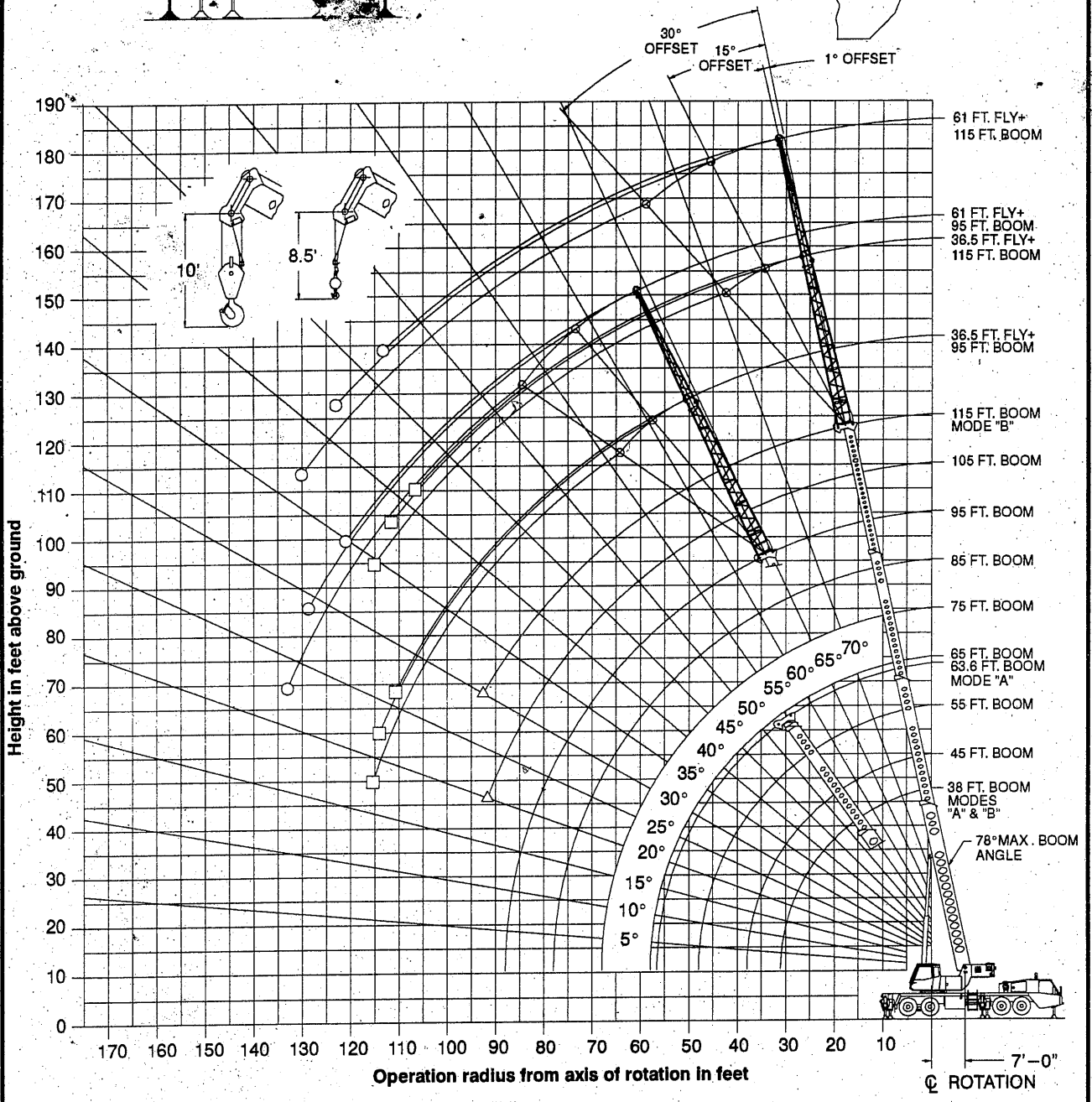

○ **Denotes Main Boom + 61' Fly–Boom Mode "B"**
□ **Denotes Main Boom + 36.5' Fly–Boom Mode "B"**
△ **Denotes Main Boom–Boom Mode "B"**

Note: Boom and fly geometry shown are for unloaded condition and crane standing level on firm supporting surface. Boom deflection, subsequent radius and boom angle change must be accounted for when applying load to hook.

⚠ WARNING

Do Not Lower The Boom Below The Minimum Boom Angle For No Load As Shown In The Lift Charts For The Boom Lengths Given. Loss Of Stability Will Occur Causing A Tipping Condition.

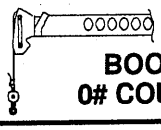

BOOM MODE "A"
0# COUNTERWEIGHT

Maximum Allowable Lifting Capacities
Rated Lifting Capacities In Pounds
On Fully Extended Outriggers
See Set Up Note 2.

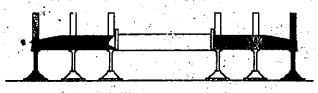

38 Ft. To 45 Ft. Main Boom

Load Radius In Feet	38 Ft.			45 Ft.			Load Radius In Feet
	Loaded Boom Angle (Deg.)	360°	Over Rear	Loaded Boom Angle (Deg.)	360°	Over Rear	
10	67.0	121,300	121,300	71.0	87,400	87,400	10
12	64.0	108,200	108,200	68.5	87,400	87,400	12
15	58.5	92,000	92,000	64.0	87,400	87,400	15
20	48.5	66,900	66,900	56.5	66,200	66,200	20
25	36.5	44,500	44,500	48.0	43,800	43,800	25
30	17.5	31,700	31,700	38.0	31,200	31,200	30
35				24.5	23,000	23,400	35
Min. Boom Angle/Cap.	0°	26,300	26,300	0°	19,100	19,900	Min. Boom Angle/Cap.

Note: Refer To Page 8 For "Lifting Capacity Deductions" For Capacity Reductions Caused By Stowed Or Erected Auxiliary Load Handling Equipment.

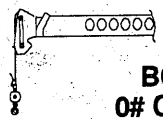

BOOM MODE "A"
0# COUNTERWEIGHT

Maximum Allowable Lifting Capacities
Rated Lifting Capacities In Pounds
On Fully Extended Outriggers
See Set Up Note 2.

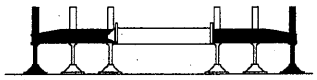

55 Ft. To 63.6 Ft. Main Boom

Load Radius In Feet	55 Ft.			63.6 Ft.			Load Radius In Feet
	Loaded Boom Angle (Deg.)	360°	Over Rear	Loaded Boom Angle (Deg.)	360°	Over Rear	
10	75.0	85,600	85,600				10
12	73.0	85,600	85,600	75.5	56,300	56,300	12
15	69.5	85,600	85,600	73.0	56,300	56,300	15
20	63.5	65,500	65,500	68.0	53,000	53,000	20
25	57.5	43,100	43,100	63.0	42,600	42,600	25
30	50.5	30,600	30,600	57.5	30,200	30,200	30
35	43.0	22,400	22,900	51.5	22,000	22,500	35
40	34.0	16,700	17,600	45.0	16,300	17,300	40
45	22.0	12,700	13,800	38.0	12,400	13,500	45
50				29.0	9,500	10,700	50
55				15.5	7,200	8,400	55
Min. Boom Angle/Cap.	0°	10,700	11,900	0°	6,500	7,700	Min. Boom Angle/Cap.

Note: Refer To Page 8 For "Lifting Capacity Deductions" For Capacity Reductions Caused By Stowed Or Erected Auxiliary Load Handling Equipment.

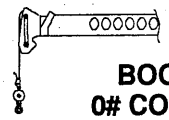

BOOM MODE "B"
0# COUNTERWEIGHT

Maximum Allowable Lifting Capacities
Rated Lifting Capacities In Pounds
On Fully Extended Outriggers
See Set Up Note 2.

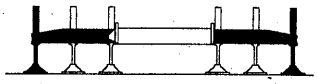

38 Ft. To 55 Ft. Main Boom

Load Radius In Feet	38 Ft.			45 Ft.			55 Ft.			Load Radius In Feet
	Loaded Boom Angle (Deg.)	360°	Over Rear	Loaded Boom Angle (Deg.)	360°	Over Rear	Loaded Boom Angle (Deg.)	360°	Over Rear	
10	67.0	121,300	121,300	71.0	42,000	42,000	74.5	42,000	42,000	10
12	64.0	108,200	108,200	68.0	42,000	42,000	72.5	42,000	42,000	12
15	58.5	92,000	92,000	64.0	42,000	42,000	69.0	42,000	42,000	15
20	48.5	66,900	66,900	56.5	42,000	42,000	63.5	42,000	42,000	20
25	36.5	44,500	44,500	48.0	42,000	42,000	57.5	42,000	42,000	25
30	17.5	31,700	31,700	38.0	32,400	32,400	50.5	33,000	33,000	30
35				24.5	24,200	24,500	43.0	24,900	25,100	35
40							34.0	19,000	19,700	40
45							22.0	14,900	15,800	45
Min. Boom Angle/ Cap.	0°	26,300	26,300	0°	20,100	20,100	0°	12,900	13,900	Min. Boom Angle/ Cap.

65 Ft. To 85 Ft. Main Boom

Load Radius In Feet	65 Ft.			75 Ft.			85 Ft.			Load Radius In Feet
	Loaded Boom Angle (Deg.)	360°	Over Rear	Loaded Boom Angle (Deg.)	360°	Over Rear	Loaded Boom Angle (Deg.)	360°	Over Rear	
12	75.5	42,000	42,000							12
15	73.0	42,000	42,000	75.5	42,000	42,000	77.5	42,000	42,000	15
20	68.0	42,000	42,000	71.5	42,000	42,000	74.5	42,000	42,000	20
25	63.0	42,000	42,000	67.5	42,000	42,000	71.0	41,800	41,800	25
30	58.0	33,300	33,300	63.0	33,500	33,500	67.0	33,700	33,700	30
35	52.5	25,300	25,400	58.5	25,500	25,600	63.0	25,600	25,700	35
40	46.0	19,400	20,000	53.5	19,600	20,300	59.0	19,800	20,400	40
45	39.5	15,300	16,100	48.5	15,500	16,400	54.5	15,700	16,500	45
50	31.0	12,200	13,200	43.0	12,500	13,400	50.5	12,700	13,600	50
55	20.0	9,900	10,900	36.5	10,100	11,200	45.5	10,300	11,300	55
60				29.0	8,300	9,300	40.5	8,400	9,500	60
65				18.5	6,700	7,700	34.5	6,900	7,900	65
70							27.5	5,700	6,600	70
75							17.5	4,600	5,500	75
Min. Boom Angle/ Cap.	0°	8,700	9,700	0°	5,900	6,900	0°	4,000	4,900	Min. Boom Angle/ Cap.

Note: Refer To Page 8 For "Lifting Capacity Deductions" For Capacity Reductions Caused By Stowed Or Erected Auxiliary Load Handling Equipment.

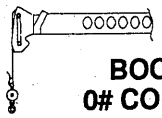

BOOM MODE "B"
0# COUNTERWEIGHT

Maximum Allowable Lifting Capacities
Rated Lifting Capacities In Pounds
On Fully Extended Outriggers
See Set Up Note 2.

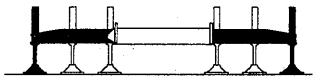

95 Ft. To 115 Ft. Main Boom

Load Radius In Feet	95 Ft.			105 Ft.			115 Ft.			Load Radius In Feet
	Loaded Boom Angle (Deg.)	360°	Over Rear	Loaded Boom Angle (Deg)	360°	Over Rear	Loaded Boom Angle (Deg.)	360°	Over Rear	
20	76.5	38,600	38,600							20
25	73.5	33,800	33,800	75.5	30,300	30,300	77.0	24,500	24,500	25
30	70.0	29,800	29,800	72.5	27,000	27,000	74.5	24,500	24,500	30
35	66.5	25,800	25,800	69.5	24,100	24,100	72.0	22,200	22,200	35
40	63.0	19,900	20,500	66.5	20,000	20,600	69.5	20,000	20,000	40
45	59.5	15,800	16,600	63.0	15,900	16,700	66.5	15,900	16,800	45
50	55.5	12,700	13,700	60.0	12,800	13,700	63.5	12,900	13,800	50
55	51.5	10,400	11,400	56.5	10,500	11,500	60.5	10,600	11,600	55
60	47.5	8,600	9,600	53.0	8,700	9,700	57.0	8,700	9,700	60
65	43.0	7,100	8,000	49.0	7,100	8,100	54.0	7,200	8,200	65
70	38.0	5,800	6,800	45.5	5,900	6,800	50.5	6,000	6,900	70
75	32.5	4,700	5,700	41.0	4,800	5,800	47.0	4,900	5,800	75
80	26.0	3,800	4,700	36.5	3,900	4,800	43.5	4,000	4,900	80
85	16.5	3,000	3,900	31.0	3,100	4,000	39.5	3,200	4,100	85
90				25.0	2,500	3,300	35.0	2,500	3,400	90
Min. Boom Angle/ Cap.	0°	2,800	3,500	20°			30°			Min. Boom Angle/ Cap.

Note: Refer To Page 8 For "Lifting Capacity Deductions" For Capacity Reductions Caused By Stowed Or Erected Auxiliary Load Handling Equipment.

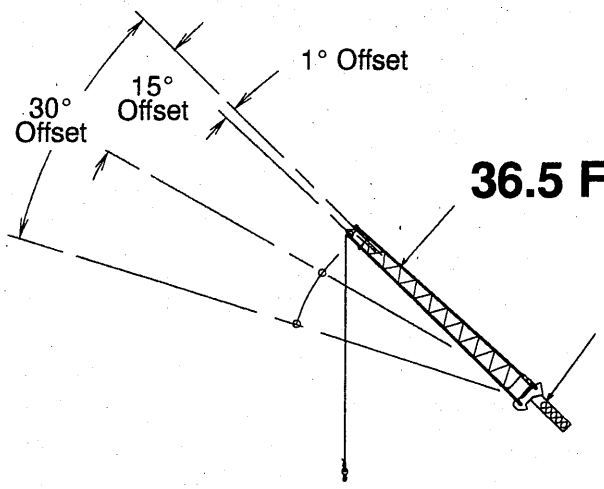

36.5 Ft. Offset Fly

95 Ft. Main Boom

BOOM MODE "B"
0# COUNTERWEIGHT

Maximum Allowable Lifting Capacities
Rated Lifting Capacities In Pounds
On Fully Extended Outriggers
See Set Up Note 2.

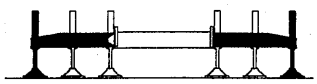

95 Ft. Main Boom + 36.5 Ft. Offset Fly

Load Radius In Feet	1° Offset		15° Offset		30° Offset		Load Radius In Feet
	Loaded Boom Angle (Deg.)	360°	Loaded Boom Angle (Deg.)	360°	Loaded Boom Angle (Deg.)	360°	
30	76.5	16,900					30
35	74.0	15,700	77.5	11,900			35
40	72.0	14,600	75.5	11,300			40
45	70.0	13,700	73.5	10,700	77.0	8,700	45
50	67.5	12,800	71.0	10,300	74.5	8,300	50
55	65.0	12,100	68.5	9,800	72.0	8,000	55
60	62.5	10,200	66.0	9,400	69.5	7,700	60
65	59.5	8,600	63.5	8,900	67.0	7,400	65
70	57.0	7,300	61.0	8,000	64.5	7,200	70
75	54.0	6,200	58.0	6,900	61.5	6,900	75
80	51.0	5,300	55.0	5,900	58.5	6,400	80
85	48.0	4,500	52.0	5,000	55.5	5,400	85
90	45.0	3,800	48.5	4,200	52.0	4,600	90
95	41.5	3,200	45.0	3,500	48.0	3,900	95
100	38.0	2,600	41.5	2,900	44.5	3,200	100
105	34.0	2,100	37.5	2,400	40.0	2,600	105
110	29.5	1,700	33.0	1,900	35.0	2,100	110
115					29.0	1,600	115
120							120

⚠ WARNING

Do Not Lower 36.5 Ft. Offset Fly In Working Position Below 27 Degrees Unless Main Boom Length Is 84 Ft. Or Less, Since Loss Of Stability Will Occur Causing A Tipping Condition.

Note: Refer To Page 8 For "Lifting Capacity Deductions" For Capacity Reductions Caused By Stowed Or Erected Auxiliary Load Handling Equipment.

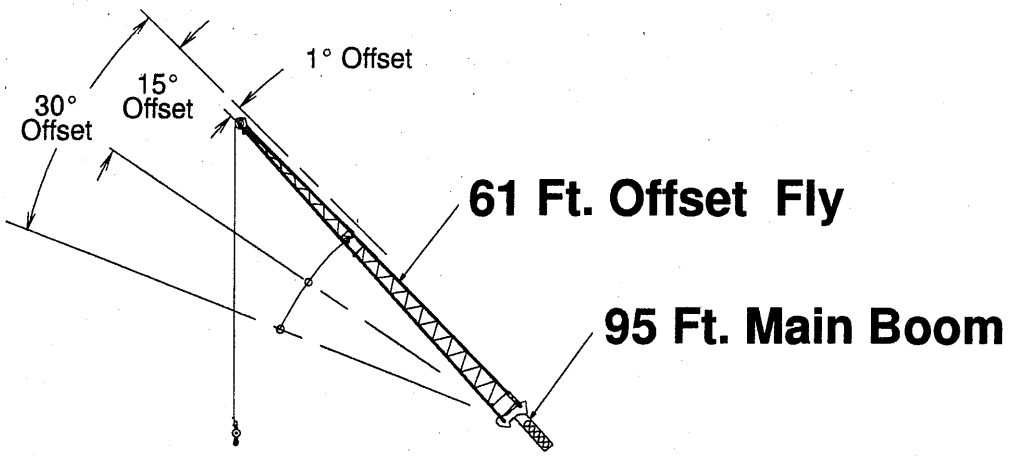

BOOM MODE "B"
0# COUNTERWEIGHT

Maximum Allowable Lifting Capacities
Rated Lifting Capacities In Pounds
On Fully Extended Outriggers
See Set Up Note 2.

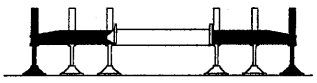

95 Ft. Main Boom + 61 Ft. Offset Fly

Load Radius In Feet	1° Offset		15° Offset		30° Offset		Load Radius In Feet
	Loaded Boom Angle (Deg.)	360°	Loaded Boom Angle (Deg.)	360°	Loaded Boom Angle (Deg.)	360°	
35	77.5	9,500					35
40	75.5	9,500					40
45	74.0	9,000					45
50	72.0	8,400	77.0	6,200			50
55	70.0	7,800	75.5	5,900			55
60	68.0	7,300	73.5	5,600			60
65	66.0	6,800	71.5	5,300	76.5	4,300	65
70	64.0	6,300	69.5	5,000	74.5	4,100	70
75	62.0	6,000	67.0	4,800	72.0	4,000	75
80	60.0	5,600	65.0	4,600	70.0	3,800	80
85	58.0	5,200	63.0	4,400	68.0	3,700	85
90	55.5	4,500	60.5	4,200	65.5	3,600	90
95	53.0	3,800	58.5	4,000	63.0	3,500	95
100	50.5	3,300	56.0	3,900	60.5	3,400	100
105	47.5	2,800	53.0	3,300	58.0	3,300	105
110	45.0	2,300	50.5	2,800	55.0	3,200	110
115	42.0	1,900	47.5	2,400	52.0	2,800	115
120	39.0	1,500	44.0	1,900	48.5	2,300	120
125			41.0	1,600	45.0	1,900	125
130			37.0	1,200	40.5	1,400	130

⚠ WARNING

Do Not Lower 61 Ft. Offset Fly In Working Position Below 35.5 Degrees Unless Main Boom Length Is 76 Ft. Or Less, Since Loss Of Stability Will Occur Causing A Tipping Condition.

Note: Refer To Page 8 For "Lifting Capacity Deductions" For Capacity Reductions Caused By Stowed Or Erected Auxiliary Load Handling Equipment.

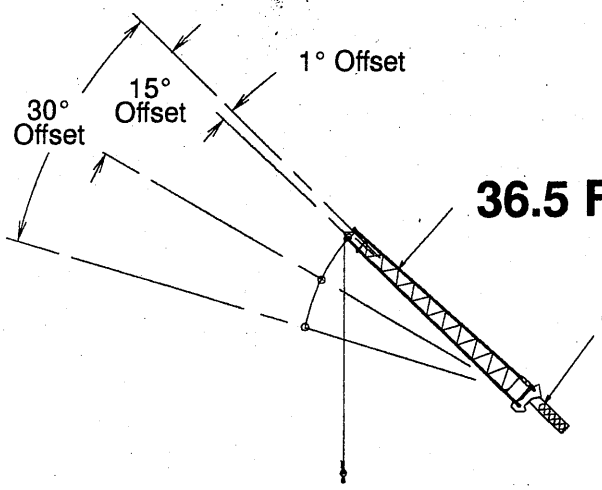

36.5 Ft. Offset Fly

115 Ft. Main Boom

BOOM MODE "B"
0# COUNTERWEIGHT

Maximum Allowable Lifting Capacities
Rated Lifting Capacities In Pounds
On Fully Extended Outriggers
See Set Up Note 2.

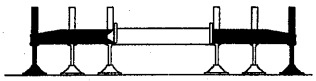

115 Ft. Main Boom + 36.5 Ft. Offset Fly

Load Radius In Feet	1° Offset		15° Offset		30° Offset		Load Radius In Feet
	Loaded Boom Angle (Deg.)	360°	Loaded Boom Angle (Deg.)	360°	Loaded Boom Angle (Deg.)	360°	
35	76.5	10,500					35
40	75.0	10,500					40
45	73.0	10,500	76.5	10,100			45
50	71.5	10,500	75.0	10,100	78.0*	8,700	50
55	69.5	10,500	73.0	10,100	76.0	8,400	55
60	67.5	9,900	71.0	10,100	74.0	8,100	60
65	65.0	8,300	69.0	9,200	71.5	7,800	65
70	63.0	7,000	66.5	7,800	69.5	7,600	70
75	60.5	5,900	64.0	6,600	67.5	7,300	75
80	58.0	5,000	61.5	5,600	65.0	6,200	80
85	55.5	4,200	59.0	4,800	62.5	5,300	85
90	53.0	3,500	56.5	4,000	59.5	4,500	90
95	50.5	2,900	54.0	3,300	57.0	3,800	95
100	47.5	2,300	51.0	2,800	54.0	3,100	100
105	45.0	1,800	48.5	2,200	51.0	2,500	105
110			45.0	1,700	48.0	2,000	110
115					44.5	1,500	115

⚠ WARNING

Do Not Lower 36.5 Ft. Offset Fly In Working Position Below 42 Degrees Unless Main Boom Length Is 84 Ft. Or Less, Since Loss Of Stability Will Occur Causing A Tipping Condition.

Note: Refer To Page 8 For "Lifting Capacity Deductions" For Capacity Reductions Caused By Stowed Or Erected Auxiliary Load Handling Equipment.

*** This capacity based on maximum obtainable boom angle.**

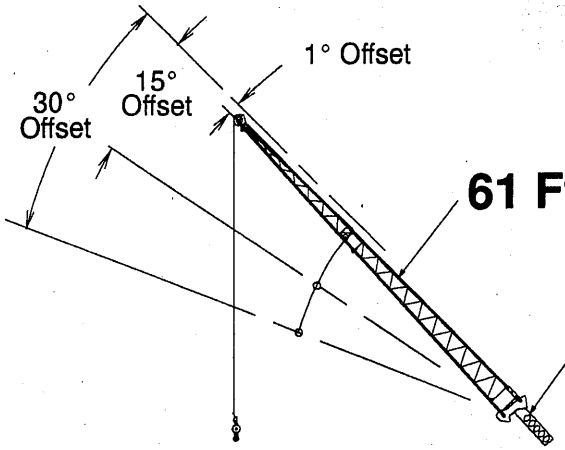

BOOM MODE "B"
0# COUNTERWEIGHT

Maximum Allowable Lifting Capacities
Rated Lifting Capacities In Pounds
On Fully Extended Outriggers
See Set Up Note 2.

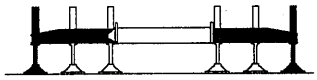

115 Ft. Main Boom + 61 Ft. Offset Fly

Load Radius In Feet	1° Offset		15° Offset		30° Offset		Load Radius In Feet
	Loaded Boom Angle (Deg.)	360°	Loaded Boom Angle (Deg.)	360°	Loaded Boom Angle (Deg.)	360°	
40	77.5	7,100					40
45	76.0	7,100					45
50	74.5	7,100					50
55	73.0	7,100					55
60	71.5	7,100	76.5	6,000			60
65	70.0	7,100	75.0	5,700			65
70	68.5	7,100	73.0	5,400	77.5	4,300	70
75	67.0	6,700	71.5	5,200	76.0	4,200	75
80	65.0	5,600	69.5	4,900	74.0	4,000	80
85	63.0	4,800	68.0	4,700	72.0	3,900	85
90	61.0	4,100	66.0	4,500	70.5	3,800	90
95	59.0	3,400	64.0	4,200	68.5	3,700	95
100	56.5	2,900	62.0	3,600	66.5	3,600	100
105	54.5	2,400	59.5	3,000	64.5	3,500	105
110	52.0	1,900	57.5	2,500	62.0	3,100	110
115	50.0	1,500	55.0	2,100	59.5	2,600	115
120			52.5	1,700	57.0	2,100	120
125			50.0	1,300	54.5	1,700	125
130					51.5	1,300	130

⚠ WARNING

Do Not Lower 61 Ft. Offset Fly In Working Position Below 47.5 Degrees Unless Main Boom Length Is 76 Ft. Or Less, Since Loss Of Stability Will Occur Causing A Tipping Condition.

Note: Refer To Page 8 For "Lifting Capacity Deductions" For Capacity Reductions Caused By Stowed Or Erected Auxiliary Load Handling Equipment.

This Page Left Blank Intentionally

WORKING RANGE DIAGRAM

Working Range Diagram
On Fully Extended Outriggers

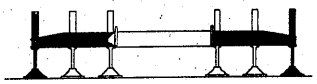

4,000# Counterweight

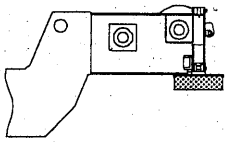

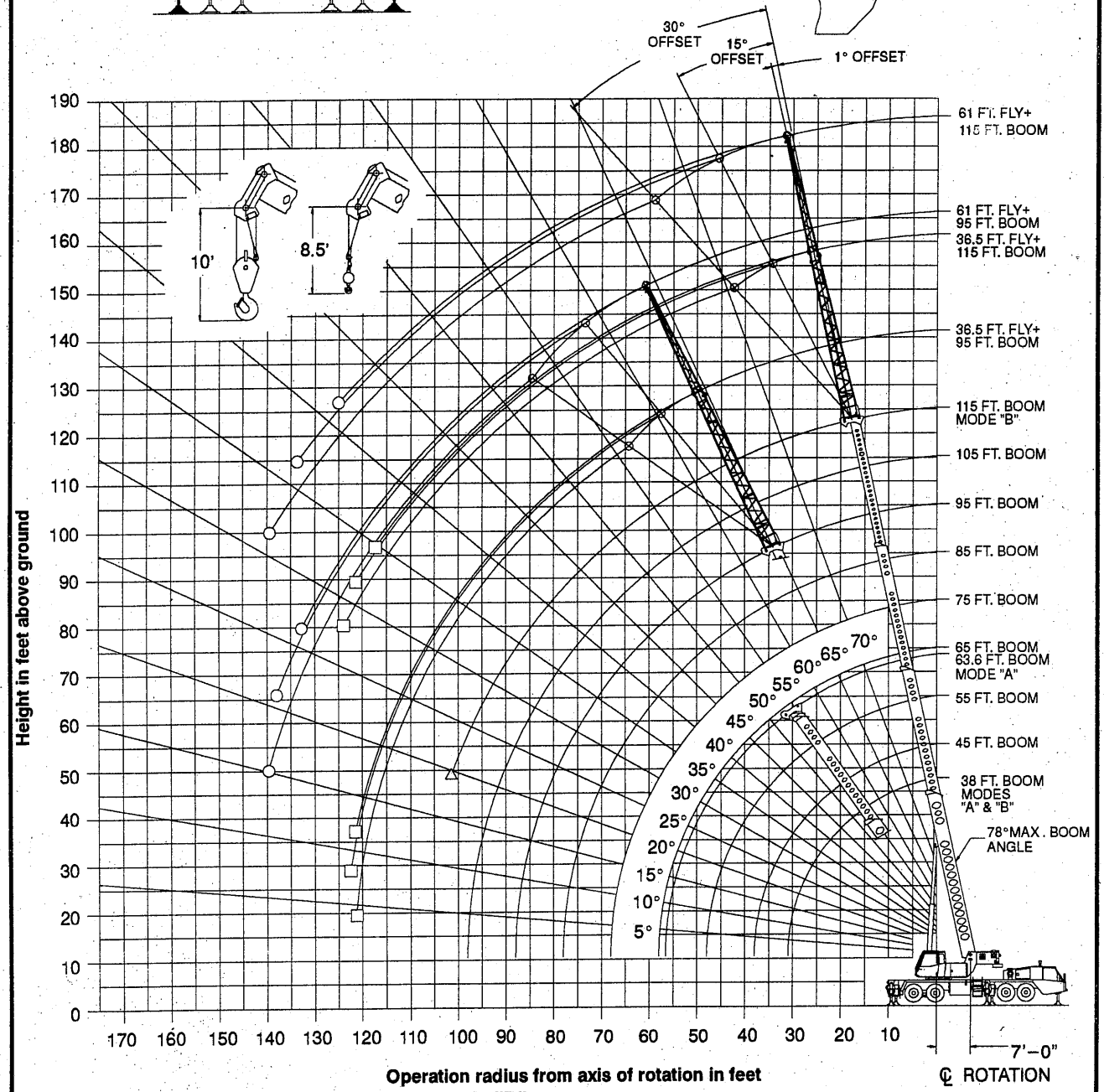

○ **Denotes Main Boom + 61' Fly–Boom Mode "B"**
□ **Denotes Main Boom + 36.5' Fly–Boom Mode "B"**
△ **Denotes Main Boom–Boom Mode "B"**

Note: Boom and fly geometry shown are for unloaded condition and crane standing level on firm supporting surface. Boom deflection, subsequent radius and boom angle change must be accounted for when applying load to hook.

⚠ WARNING

Do Not Lower The Boom Below The Minimum Boom Angle For No Load As Shown In The Lift Charts For The Boom Lengths Given. Loss Of Stability Will Occur Causing A Tipping Condition.

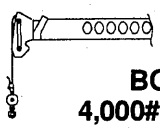

BOOM MODE "A"
4,000# COUNTERWEIGHT

Maximum Allowable Lifting Capacities
Rated Lifting Capacities In Pounds
On Fully Extended Outriggers
See Set Up Note 2.

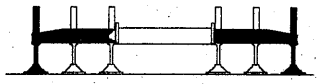

38 Ft. To 45 Ft. Main Boom

Load Radius In Feet	38 Ft.			45 Ft.			Load Radius In Feet
	Loaded Boom Angle (Deg.)	360°	Over Rear	Loaded Boom Angle (Deg.)	360°	Over Rear	
10	67.0	124,200	124,200	71.0	87,400	87,400	10
12	64.0	110,900	110,900	68.5	87,400	87,400	12
15	58.5	95,000	95,000	64.0	87,400	87,400	15
20	48.5	69,300	69,300	56.5	68,700	68,700	20
25	36.5	49,000	49,000	48.0	48,300	48,300	25
30	17.5	35,200	35,200	38.0	34,700	34,700	30
35				24.5	26,200	26,200	35
Min. Boom Angle/Cap.	0°	26,300	26,300	0°	21,100	21,100	Min. Boom Angle/Cap.

Note: Refer To Page 8 For "Lifting Capacity Deductions" For Capacity Reductions Caused By Stowed Or Erected Auxiliary Load Handling Equipment.

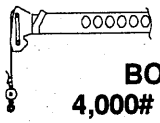

BOOM MODE "A"
4,000# COUNTERWEIGHT

Maximum Allowable Lifting Capacities
Rated Lifting Capacities In Pounds
On Fully Extended Outriggers
See Set Up Note 2.

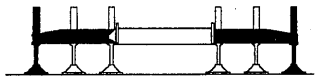

55 Ft. To 63.6 Ft. Main Boom

Load Radius In Feet	55 Ft.			63.6 Ft.			Load Radius In Feet
	Loaded Boom Angle (Deg.)	360°	Over Rear	Loaded Boom Angle (Deg.)	360°	Over Rear	
10	75.0	85,600	85,600				10
12	73.0	85,600	85,600	75.5	56,300	56,300	12
15	69.5	85,600	85,600	73.0	56,300	56,300	15
20	63.5	68,000	68,000	68.0	53,000	53,000	20
25	57.5	47,600	47,600	63.0	44,900	44,900	25
30	50.5	34,000	34,000	57.5	33,600	33,600	30
35	43.0	25,700	25,700	51.5	25,300	25,300	35
40	34.0	19,900	20,000	45.0	19,600	19,600	40
45	22.0	15,400	15,800	38.0	15,100	15,500	45
50				29.0	11,800	12,400	50
55				15.5	9,300	10,000	55
Min. Boom Angle/Cap.	0°	13,200	13,800	0°	8,500	9,200	Min. Boom Angle/Cap.

Note: Refer To Page 8 For "Lifting Capacity Deductions" For Capacity Reductions Caused By Stowed Or Erected Auxiliary Load Handling Equipment.

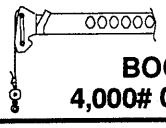

BOOM MODE "B"
4,000# COUNTERWEIGHT

Maximum Allowable Lifting Capacities
Rated Lifting Capacities In Pounds
On Fully Extended Outriggers
See Set Up Note 2.

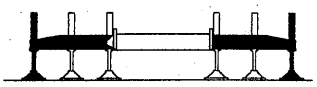

38 Ft. To 55 Ft. Main Boom

Load Radius In Feet	38 Ft.			45 Ft.			55 Ft.			Load Radius In Feet
	Loaded Boom Angle (Deg.)	360°	Over Rear	Loaded Boom Angle (Deg.)	360°	Over Rear	Loaded Boom Angle (Deg.)	360°	Over Rear	
10	67.0	124,200	124,200	71.0	42,000	42,000	74.5	42,000	42,000	10
12	64.0	110,900	110,900	68.0	42,000	42,000	72.5	42,000	42,000	12
15	58.5	95,000	95,000	64.0	42,000	42,000	69.0	42,000	42,000	15
20	48.5	69,300	69,300	56.5	42,000	42,000	63.5	42,000	42,000	20
25	36.5	49,000	49,000	48.0	42,000	42,000	57.5	42,000	42,000	25
30	17.5	35,200	35,200	38.0	35,900	35,900	50.5	36,400	36,400	30
35				24.5	27,300	27,300	43.0	27,800	27,800	35
40							34.0	22,100	22,100	40
45							22.0	17,600	17,800	45
Min. Boom Angle/ Cap.	0°	26,300	26,300	0°	20,100	20,100	0°	14,400	14,400	Min. Boom Angle/ Cap.

65 Ft. To 85 Ft. Main Boom

Load Radius In Feet	65 Ft.			75 Ft.			85 Ft.			Load Radius In Feet
	Loaded Boom Angle (Deg.)	360°	Over Rear	Loaded Boom Angle (Deg.)	360°	Over Rear	Loaded Boom Angle (Deg.)	360°	Over Rear	
12	75.5	42,000	42,000							12
15	73.0	42,000	42,000	75.5	42,000	42,000	77.5	42,000	42,000	15
20	68.0	42,000	42,000	71.5	42,000	42,000	74.5	42,000	42,000	20
25	63.5	42,000	42,000	67.5	42,000	42,000	71.0	41,800	41,800	25
30	58.0	36,800	36,800	63.0	37,000	37,000	67.0	36,900	36,900	30
35	52.5	28,200	28,200	58.5	28,400	28,400	63.0	28,500	28,500	35
40	46.5	22,400	22,400	53.5	22,600	22,600	59.0	22,800	22,800	40
45	39.5	18,000	18,200	48.5	18,200	18,400	55.0	18,400	18,500	45
50	31.0	14,600	15,000	43.0	14,800	15,200	50.5	15,000	15,300	50
55	20.0	12,000	12,500	36.5	12,200	12,700	45.5	12,400	12,800	55
60				29.0	10,100	10,700	40.5	10,300	10,900	60
65				18.5	8,400	9,100	34.5	8,600	9,200	65
70							27.5	7,200	7,800	70
75							17.5	6,000	6,700	75
Min. Boom Angle/ Cap.	0°	10,600	10,700	0°	7,500	8,100	0°	5,400	6,000	Min. Boom Angle/ Cap.

Note: Refer To Page 8 For "Lifting Capacity Deductions" For Capacity Reductions Caused By Stowed Or Erected Auxiliary Load Handling Equipment.

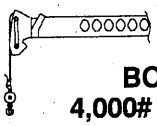

BOOM MODE "B"
4,000# COUNTERWEIGHT

Maximum Allowable Lifting Capacities
Rated Lifting Capacities In Pounds
On Fully Extended Outriggers
See Set Up Note 2.

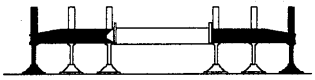

95 Ft. To 115 Ft. Main Boom

Load Radius In Feet	95 Ft.			105 Ft.			115 Ft.			Load Radius In Feet
	Loaded Boom Angle (Deg.)	360°	Over Rear	Loaded Boom Angle (Deg)	360°	Over Rear	Loaded Boom Angle (Deg.)	360°	Over Rear	
20	76.5	38,600	38,600							20
25	73.5	33,800	33,800	75.5	30,300	30,300	77.0	24,500	24,500	25
30	70.0	29,800	29,800	72.5	27,000	27,000	74.5	24,500	24,500	30
35	67.0	26,600	26,600	69.5	24,100	24,100	72.0	22,200	22,200	35
40	63.5	22,900	22,900	66.5	21,700	21,700	69.5	20,000	20,000	40
45	59.5	18,500	18,700	63.5	18,600	18,700	66.5	18,100	18,100	45
50	56.0	15,100	15,400	60.0	15,200	15,500	63.5	15,200	15,600	50
55	52.0	12,500	12,900	56.5	12,600	13,000	60.5	12,700	13,100	55
60	47.5	10,500	11,000	53.0	10,500	11,100	57.5	10,600	11,200	60
65	43.0	8,800	9,300	49.5	8,800	9,400	54.0	8,900	9,500	65
70	38.5	7,300	8,000	45.5	7,400	8,000	51.0	7,500	8,100	70
75	32.5	6,200	6,800	41.0	6,300	6,900	47.5	6,300	6,900	75
80	26.0	5,100	5,800	36.5	5,200	5,900	43.5	5,300	5,900	80
85	17.0	4,300	4,900	31.5	4,400	5,000	39.5	4,400	5,000	85
90				25.0	3,600	4,200	35.0	3,700	4,300	90
95				16.0	2,900	3,500	30.0	3,000	3,600	95
100							24.0	2,400	3,000	100
Min. Boom Angle/ Cap.	0°	3,800	4,400	0°	2,600	3,100	19.5°			Min. Boom Angle/ Cap.

Note: Refer To Page 8 For "Lifting Capacity Deductions" For Capacity Reductions Caused By Stowed Or Erected Auxiliary Load Handling Equipment.

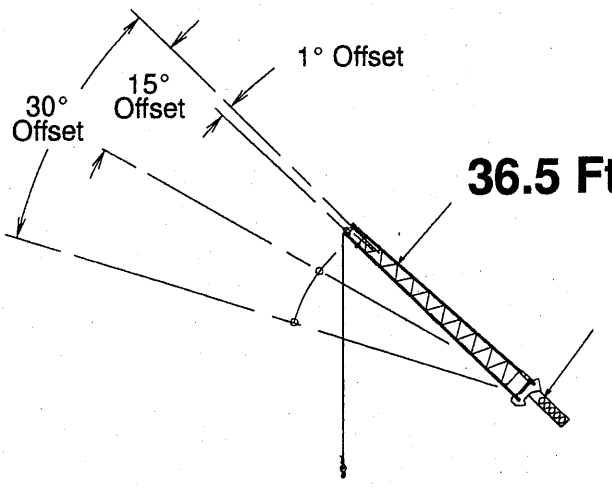

36.5 Ft. Offset Fly

95 Ft. Main Boom

BOOM MODE "B"
4,000# COUNTERWEIGHT

Maximum Allowable Lifting Capacities
Rated Lifting Capacities In Pounds
On Fully Extended Outriggers
See Set Up Note 2.

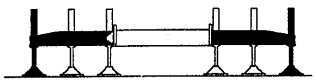

95 Ft. Main Boom + 36.5 Ft. Offset Fly

Load Radius In Feet	1° Offset		15° Offset		30° Offset		Load Radius In Feet
	Loaded Boom Angle (Deg.)	360°	Loaded Boom Angle (Deg.)	360°	Loaded Boom Angle (Deg.)	360°	
30	76.5	16,900					30
35	74.0	15,700	77.5	11,900			35
40	72.0	14,600	75.5	11,300			40
45	70.0	13,700	73.5	10,700	77.0	8,700	45
50	67.5	12,800	71.0	10,300	74.5	8,300	50
55	65.0	12,100	68.5	9,800	72.0	8,000	55
60	62.5	11,400	66.0	9,400	69.5	7,700	60
65	60.0	10,300	63.5	8,900	67.0	7,400	65
70	57.5	8,900	61.0	8,500	64.5	7,200	70
75	54.5	7,700	58.5	8,100	61.5	6,900	75
80	51.5	6,600	55.5	7,200	58.5	6,700	80
85	48.5	5,700	52.5	6,200	55.5	6,600	85
90	45.0	4,900	49.0	5,400	52.0	5,700	90
95	41.5	4,200	45.5	4,600	48.5	4,900	95
100	38.0	3,600	42.0	4,000	44.5	4,200	100
105	34.0	3,100	37.5	3,400	40.5	3,600	105
110	29.5	2,600	33.0	2,800	35.5	3,000	110
115	24.5	2,200	28.0	2,300	29.0	2,400	115
120	17.5	1,800	20.5	1,900			120

⚠ WARNING

Do Not Lower 36.5 Ft. Offset Fly In Working Position Below 12.5 Degrees Unless Main Boom Length Is 92 Ft. Or Less, Since Loss Of Stability Will Occur Causing A Tipping Condition.

Note: Refer To Page 8 For "Lifting Capacity Deductions" For Capacity Reductions Caused By Stowed Or Erected Auxiliary Load Handling Equipment.

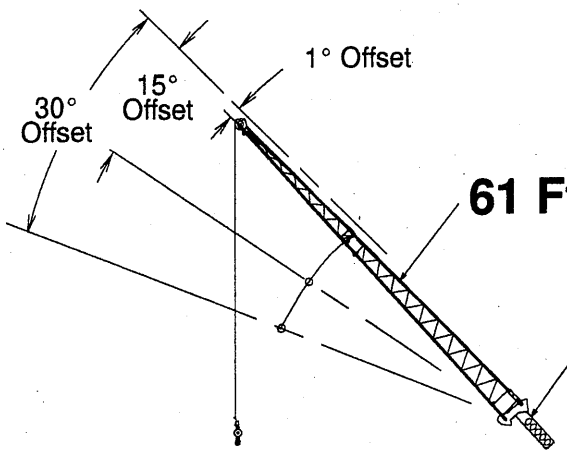

BOOM MODE "B"
4,000# COUNTERWEIGHT

Maximum Allowable Lifting Capacities
Rated Lifting Capacities In Pounds
On Fully Extended Outriggers
See Set Up Note 2.

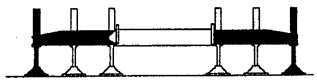

95 Ft. Main Boom + 61 Ft. Offset Fly

Load Radius In Feet	1° Offset		15° Offset		30° Offset		Load Radius In Feet
	Loaded Boom Angle (Deg.)	360°	Loaded Boom Angle (Deg.)	360°	Loaded Boom Angle (Deg.)	360°	
35	77.5	9,500					35
40	75.5	9,500					40
45	74.0	9,000					45
50	72.0	8,400	77.0	6,200			50
55	70.0	7,800	75.5	5,900			55
60	68.0	7,300	73.5	5,600			60
65	66.0	6,800	71.5	5,300	76.5	4,300	65
70	64.0	6,300	69.5	5,000	74.5	4,100	70
75	62.0	6,000	67.0	4,800	72.0	4,000	75
80	60.0	5,600	65.0	4,600	70.0	3,800	80
85	58.0	5,300	63.0	4,400	68.0	3,700	85
90	55.5	5,000	60.5	4,200	65.5	3,600	90
95	53.5	4,800	58.5	4,000	63.0	3,500	95
100	50.5	4,300	56.0	3,900	60.5	3,400	100
105	48.0	3,700	53.5	3,700	58.0	3,300	105
110	45.5	3,200	50.5	3,600	55.0	3,200	110
115	42.5	2,800	48.0	3,200	52.0	3,100	115
120	39.5	2,400	44.5	2,800	49.0	3,100	120
125	36.0	2,000	41.0	2,300	45.0	2,600	125
130	32.5	1,700	37.5	2,000	41.0	2,200	130
135	28.5	1,400	33.5	1,600	36.0	1,800	135
140			28.5	1,300	30.0	1,300	140

⚠ WARNING

Do Not Lower 61 Ft. Offset Fly In Working Position Below 27 Degrees Unless Main Boom Length Is 84 Ft. Or Less, Since Loss Of Stability Will Occur Causing A Tipping Condition.

Note: Refer To Page 8 For "Lifting Capacity Deductions" For Capacity Reductions Caused By Stowed Or Erected Auxiliary Load Handling Equipment.

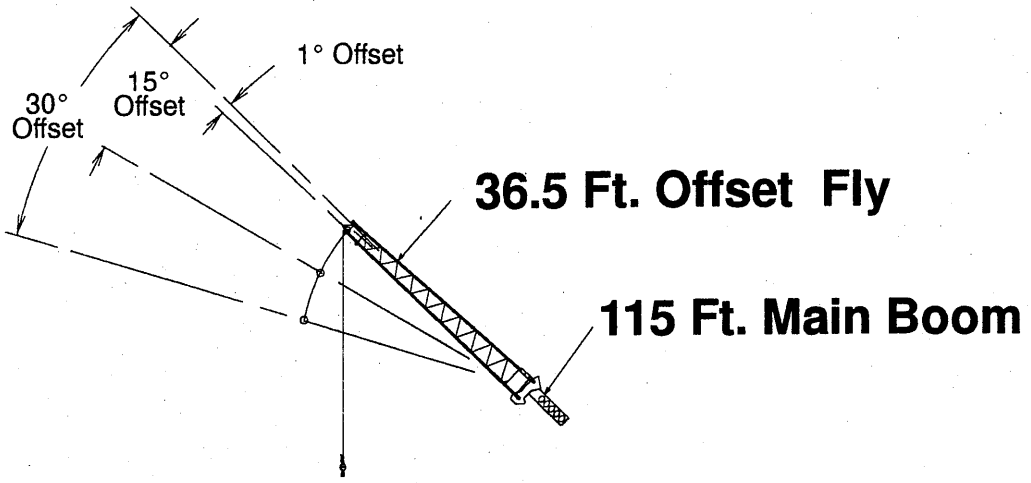

BOOM MODE "B"
4,000# COUNTERWEIGHT

Maximum Allowable Lifting Capacities
Rated Lifting Capacities In Pounds
On Fully Extended Outriggers
See Set Up Note 2.

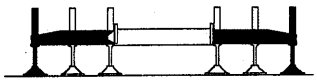

115 Ft. Main Boom + 36.5 Ft. Offset Fly

Load Radius In Feet	1° Offset		15° Offset		30° Offset		Load Radius In Feet
	Loaded Boom Angle (Deg.)	360°	Loaded Boom Angle (Deg.)	360°	Loaded Boom Angle (Deg.)	360°	
35	76.5	10,500					35
40	75.0	10,500					40
45	73.0	10,500	76.5	10,100			45
50	71.5	10,500	75.0	10,100	78.0*	8,700	50
55	69.5	10,500	73.0	10,100	76.0	8,400	55
60	67.5	10,500	71.0	10,100	74.0	8,100	60
65	65.5	10,000	69.0	9,700	71.5	7,800	65
70	63.5	8,600	67.0	9,300	69.5	7,600	70
75	61.0	7,400	64.5	8,100	67.5	7,400	75
80	58.5	6,300	62.0	7,000	65.0	7,100	80
85	56.0	5,400	59.5	6,000	63.0	6,500	85
90	53.5	4,700	57.0	5,200	60.0	5,600	90
95	51.0	4,000	54.5	4,400	57.5	4,800	95
100	48.0	3,400	51.5	3,800	54.5	4,100	100
105	45.5	2,800	48.5	3,200	51.5	3,500	105
110	42.5	2,300	45.5	2,700	48.0	2,900	110
115	39.0	1,900	42.5	2,200	45.0	2,400	115
120			39.0	1,700	41.0	1,900	120
125					37.0	1,500	125

⚠ WARNING

Do Not Lower 36.5 Ft. Offset Fly In Working Position Below 35.5 Degrees Unless Main Boom Length Is 92 Ft. Or Less, Since Loss Of Stability Will Occur Causing A Tipping Condition.

Note: Refer To Page 8 For "Lifting Capacity Deductions" For Capacity Reductions Caused By Stowed Or Erected Auxiliary Load Handling Equipment.

*** This capacity based on maximum obtainable boom angle.**

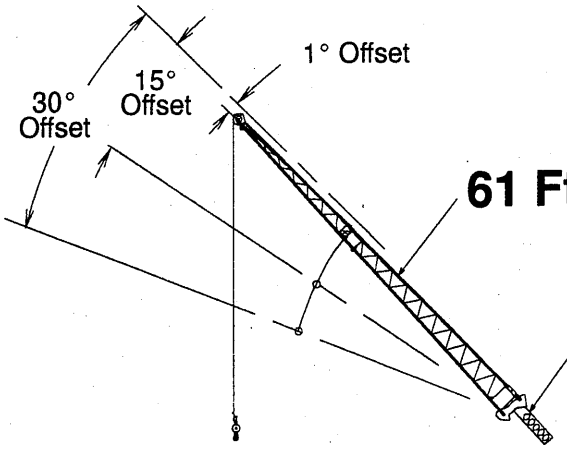

BOOM MODE "B"
4,000# COUNTERWEIGHT

Maximum Allowable Lifting Capacities
Rated Lifting Capacities In Pounds
On Fully Extended Outriggers
See Set Up Note 2.

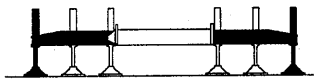

115 Ft. Main Boom + 61 Ft. Offset Fly

Load Radius In Feet	1° Offset		15° Offset		30° Offset		Load Radius In Feet
	Loaded Boom Angle (Deg.)	360°	Loaded Boom Angle (Deg.)	360°	Loaded Boom Angle (Deg.)	360°	
40	77.5	7,100					40
45	76.0	7,100					45
50	74.5	7,100					50
55	73.0	7,100					55
60	71.5	7,100	76.5	6,000			60
65	70.0	7,100	75.0	5,700			65
70	68.5	7,100	73.0	5,400	77.5	4,300	70
75	67.0	6,700	71.5	5,200	76.0	4,200	75
80	65.5	6,300	69.5	4,900	74.0	4,000	80
85	63.5	6,000	68.0	4,700	72.0	3,900	85
90	61.5	5,200	66.0	4,500	70.5	3,800	90
95	59.5	4,500	64.0	4,400	68.5	3,700	95
100	57.0	3,900	62.5	4,200	66.5	3,600	100
105	55.0	3,400	60.5	4,000	64.5	3,500	105
110	52.5	2,900	58.0	3,500	62.0	3,400	110
115	50.5	2,400	55.5	3,000	60.0	3,300	115
120	48.0	2,000	53.0	2,500	57.5	3,000	120
125	45.5	1,600	50.5	2,100	55.0	2,500	125
130			48.0	1,700	52.0	2,100	130
135			45.0	1,400	49.0	1,700	135
140					46.0	1,300	140

⚠ WARNING

Do Not Lower 61 Ft. Offset Fly In Working Position Below 42 Degrees Unless Main Boom Length Is 84 Ft. Or Less, Since Loss Of Stability Will Occur Causing A Tipping Condition.

Note: Refer To Page 8 For "Lifting Capacity Deductions" For Capacity Reductions Caused By Stowed Or Erected Auxiliary Load Handling Equipment.

This Page Left Blank Intentionally

WORKING RANGE DIAGRAM

Working Range Diagram
On Fully Extended Outriggers

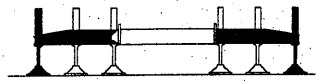

8,000# Counterweight

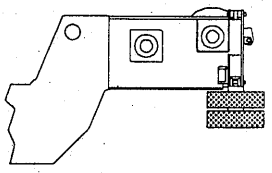

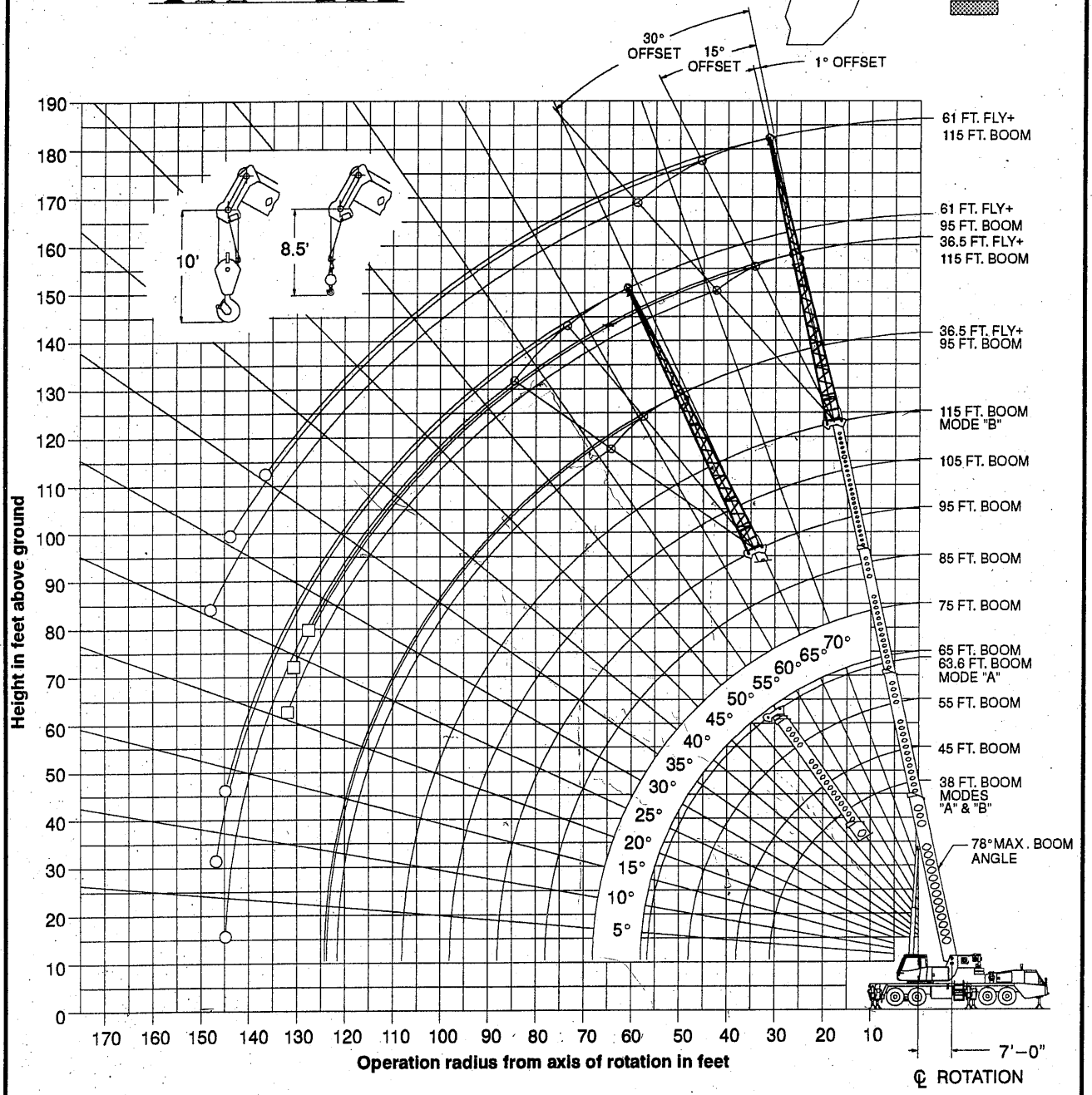

○ **Denotes Main Boom + 61' Fly–Boom Mode "B"**
□ **Denotes Main Boom + 36.5' Fly–Boom Mode "B"**

Note: Boom and fly geometry shown are for unloaded condition and crane standing level on firm supporting surface. Boom deflection, subsequent radius and boom angle change must be accounted for when applying load to hook.

⚠ WARNING

Do Not Lower The Boom Below The Minimum Boom Angle For No Load As Shown In The Lift Charts For The Boom Lengths Given. Loss Of Stability Will Occur Causing A Tipping Condition.

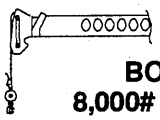

BOOM MODE "A"
8,000# COUNTERWEIGHT

Maximum Allowable Lifting Capacities
Rated Lifting Capacities In Pounds
On Fully Extended Outriggers
See Set Up Note 2.

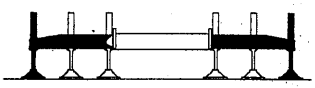

38 Ft. To 45 Ft. Main Boom

Load Radius In Feet	38 Ft.			45 Ft.			Load Radius In Feet
	Loaded Boom Angle (Deg.)	360°	Over Rear	Loaded Boom Angle (Deg.)	360°	Over Rear	
10	67.0	126,900	126,900	71.0	87,400	87,400	10
12	64.0	113,200	113,200	68.5	87,400	87,400	12
15	58.5	97,200	97,200	64.0	87,400	87,400	15
20	48.5	71,800	71,800	56.5	71,200	71,200	20
25	36.5	53,600	53,600	48.0	52,900	52,900	25
30	17.5	38,700	38,700	38.0	38,100	38,100	30
35				24.5	29,000	29,000	35
Min. Boom Angle/Cap.	0°	26,300	26,300	0°	21,100	21,100	Min. Boom Angle/Cap.

Note: Refer To Page 8 For "Lifting Capacity Deductions" For Capacity Reductions Caused By Stowed Or Erected Auxiliary Load Handling Equipment.

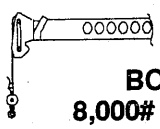

BOOM MODE "A"
8,000# COUNTERWEIGHT

Maximum Allowable Lifting Capacities
Rated Lifting Capacities In Pounds
On Fully Extended Outriggers
See Set Up Note 2.

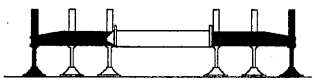

55 Ft. To 63.6 Ft. Main Boom

Load Radius In Feet	55 Ft.			63.6 Ft.			Load Radius In Feet
	Loaded Boom Angle (Deg.)	360°	Over Rear	Loaded Boom Angle (Deg.)	360°	Over Rear	
10	75.0	85,600	85,600				10
12	73.0	85,600	85,600	75.5	56,300	56,300	12
15	69.5	85,600	85,600	73.0	56,300	56,300	15
20	63.5	70,500	70,500	68.0	53,000	53,000	20
25	57.5	52,100	52,100	63.0	44,900	44,900	25
30	50.5	37,500	37,500	57.5	37,100	37,100	30
35	43.0	28,400	28,400	51.5	28,100	28,100	35
40	34.0	22,300	22,300	45.0	22,000	22,000	40
45	22.0	17,800	17,800	38.0	17,600	17,600	45
50				29.0	14,000	14,200	50
55				15.5	11,200	11,600	55
Min. Boom Angle/Cap.	0°	14,800	14,800	0°	10,400	10,800	Min. Boom Angle/Cap.

Note: Refer To Page 8 For "Lifting Capacity Deductions" For Capacity Reductions Caused By Stowed Or Erected Auxiliary Load Handling Equipment.

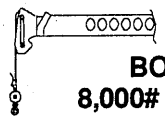

BOOM MODE "B"
8,000# COUNTERWEIGHT

Maximum Allowable Lifting Capacities
Rated Lifting Capacities In Pounds
On Fully Extended Outriggers
See Set Up Note 2.

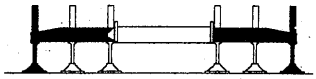

38 Ft. To 55 Ft. Main Boom

Load Radius In Feet	38 Ft.			45 Ft.			55 Ft.			Load Radius In Feet
	Loaded Boom Angle (Deg.)	360°	Over Rear	Loaded Boom Angle (Deg.)	360°	Over Rear	Loaded Boom Angle (Deg.)	360°	Over Rear	
10	67.0	126,900	126,900	71.0	42,000	42,000	74.5	42,000	42,000	10
12	64.0	113,200	113,200	68.0	42,000	42,000	72.5	42,000	42,000	12
15	58.5	97,200	97,200	64.0	42,000	42,000	69.0	42,000	42,000	15
20	48.5	71,800	71,800	56.5	42,000	42,000	63.5	42,000	42,000	20
25	36.5	53,600	53,600	48.0	42,000	42,000	57.5	42,000	42,000	25
30	17.5	38,700	38,700	38.0	39,300	39,300	50.5	39,900	39,900	30
35				24.5	30,100	30,100	43.0	30,700	30,700	35
40							34.0	24,400	24,400	40
45							22.0	19,900	19,900	45
Min. Boom Angle/ Cap.	0°	26,300	26,300	0°	20,100	20,100	0°	14,400	14,400	Min. Boom Angle/ Cap.

65 Ft. To 85 Ft. Main Boom

Load Radius In Feet	65 Ft.			75 Ft.			85 Ft.			Load Radius In Feet
	Loaded Boom Angle (Deg.)	360°	Over Rear	Loaded Boom Angle (Deg.)	360°	Over Rear	Loaded Boom Angle (Deg.)	360°	Over Rear	
12	75.5	42,000	42,000							12
15	73.0	42,000	42,000	75.5	42,000	42,000	77.5	42,000	42,000	15
20	68.0	42,000	42,000	71.5	42,000	42,000	74.5	42,000	42,000	20
25	63.5	42,000	42,000	67.5	42,000	42,000	71.0	41,800	41,800	25
30	58.0	40,200	40,200	63.0	40,400	40,400	67.0	36,900	36,900	30
35	52.5	31,000	31,000	58.5	31,200	31,200	63.5	31,400	31,400	35
40	46.5	24,800	24,800	54.0	25,000	25,000	59.0	25,100	25,100	40
45	39.5	20,200	20,200	48.5	20,400	20,400	55.0	20,600	20,600	45
50	31.5	16,800	16,800	43.0	17,000	17,000	50.5	17,100	17,100	50
55	20.0	13,900	14,100	36.5	14,100	14,300	45.5	14,300	14,400	55
60				29.0	11,900	12,200	40.5	12,000	12,300	60
65				18.5	10,000	10,400	34.5	10,200	10,500	65
70							27.5	8,600	9,000	70
75							17.5	7,300	7,800	75
Min. Boom Angle/ Cap.	0°	10,700	10,700	0°	8,100	8,100	0°	6,100	6,100	Min. Boom Angle/ Cap.

Note: Refer To Page 8 For "Lifting Capacity Deductions" For Capacity Reductions Caused By Stowed Or Erected Auxiliary Load Handling Equipment.

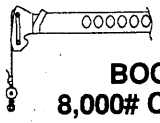

BOOM MODE "B"
8,000# COUNTERWEIGHT

Maximum Allowable Lifting Capacities
Rated Lifting Capacities In Pounds
On Fully Extended Outriggers
See Set Up Note 2.

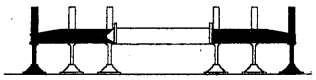

95 Ft. To 115 Ft. Main Boom

Load Radius In Feet	95 Ft.			105 Ft.			115 Ft.			Load Radius In Feet
	Loaded Boom Angle (Deg.)	360°	Over Rear	Loaded Boom Angle (Deg)	360°	Over Rear	Loaded Boom Angle (Deg.)	360°	Over Rear	
20	76.5	38,600	38,600							20
25	73.5	33,800	33,800	75.5	30,300	30,300	77.0	24,500	24,500	25
30	70.0	29,800	29,800	72.5	27,000	27,000	74.5	24,500	24,500	30
35	67.0	26,600	26,600	69.5	24,100	24,100	72.0	22,200	22,200	35
40	63.5	23,900	23,900	66.5	21,700	21,700	69.5	20,000	20,000	40
45	60.0	20,700	20,700	63.5	19,600	19,600	66.5	18,100	18,100	45
50	56.0	17,200	17,200	60.5	17,300	17,300	63.5	16,300	16,300	50
55	52.0	14,400	14,500	57.0	14,500	14,600	60.5	14,500	14,700	55
60	48.0	12,200	12,400	53.5	12,300	12,500	57.5	12,300	12,600	60
65	43.5	10,300	10,700	49.5	10,400	10,700	54.5	10,500	10,800	65
70	38.5	8,800	9,200	45.5	8,900	9,200	51.0	8,900	9,300	70
75	33.0	7,500	7,900	41.5	7,600	8,000	47.5	7,600	8,000	75
80	26.0	6,400	6,800	36.5	6,500	6,900	43.5	6,500	7,000	80
85	17.0	5,400	5,800	31.5	5,500	5,900	39.5	5,600	6,000	85
90				25.0	4,700	5,100	35.5	4,700	5,200	90
95				16.5	3,900	4,400	30.0	4,000	4,400	95
100							24.0	3,400	3,800	100
105							16.0	2,800	3,200	105
Min. Boom Angle/ Cap.	0°	4,700	4,700	0°	3,500	3,500	0°	2,500	2,500	Min. Boom Angle/ Cap.

Note: Refer To Page 8 For "Lifting Capacity Deductions" For Capacity Reductions Caused By Stowed Or Erected Auxiliary Load Handling Equipment.

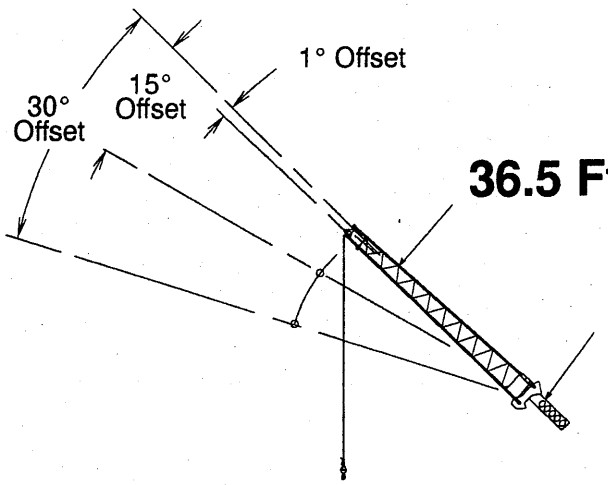

36.5 Ft. Offset Fly

95 Ft. Main Boom

BOOM MODE "B"
8,000# COUNTERWEIGHT

Maximum Allowable Lifting Capacities
Rated Lifting Capacities In Pounds
On Fully Extended Outriggers
See Set Up Note 2.

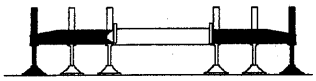

95 Ft. Main Boom + 36.5 Ft. Offset Fly

Load Radius In Feet	1° Offset		15° Offset		30° Offset		Load Radius In Feet
	Loaded Boom Angle (Deg.)	360°	Loaded Boom Angle (Deg.)	360°	Loaded Boom Angle (Deg.)	360°	
30	76.5	16,900					30
35	74.0	15,700	77.5	11,900			35
40	72.0	14,600	75.5	11,300			40
45	70.0	13,700	73.5	10,700	77.0	8,700	45
50	67.5	12,800	71.0	10,300	74.5	8,300	50
55	65.0	12,100	68.5	9,800	72.0	8,000	55
60	62.5	11,400	66.0	9,400	69.5	7,700	60
65	60.0	10,800	63.5	8,900	67.0	7,400	65
70	57.5	10,300	61.0	8,500	64.5	7,200	70
75	54.5	9,000	58.5	8,100	61.5	6,900	75
80	52.0	7,800	55.5	7,800	58.5	6,700	80
85	48.5	6,800	52.5	7,300	55.5	6,600	85
90	45.5	6,000	49.5	6,400	52.5	6,400	90
95	42.0	5,200	46.0	5,600	49.0	5,900	95
100	38.5	4,600	42.0	4,900	45.0	5,200	100
105	34.5	4,000	38.0	4,300	40.5	4,500	105
110	30.0	3,400	33.5	3,700	35.5	3,800	110
115	24.5	3,000	28.0	3,100	29.5	3,200	115
120	18.0	2,500	21.0	2,700			120
Min. Boom Angle/Cap.	0°	1,700	0°	1,700	0°	1,800	Min. Boom Angle/Cap.

Note: Refer To Page 8 For "Lifting Capacity Deductions" For Capacity Reductions Caused By Stowed Or Erected Auxiliary Load Handling Equipment.

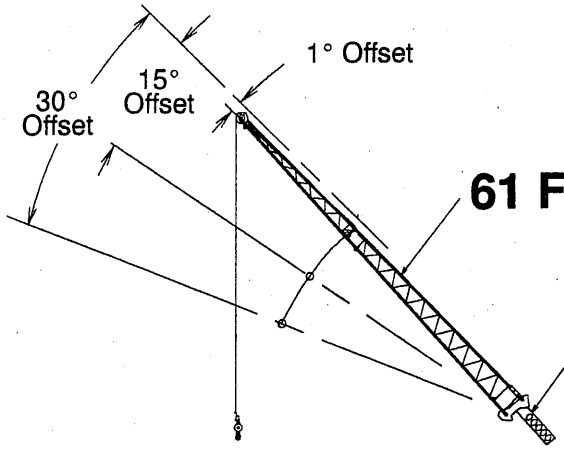

BOOM MODE "B"
8,000# COUNTERWEIGHT

Maximum Allowable Lifting Capacities
Rated Lifting Capacities In Pounds
On Fully Extended Outriggers
See Set Up Note 2.

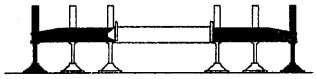

95 Ft. Main Boom + 61 Ft. Offset Fly

Load Radius In Feet	1° Offset		15° Offset		30° Offset		Load Radius In Feet
	Loaded Boom Angle (Deg.)	360°	Loaded Boom Angle (Deg.)	360°	Loaded Boom Angle (Deg.)	360°	
35	77.5	9,500					35
40	75.5	9,500					40
45	74.0	9,000					45
50	72.0	8,400	77.0	6,200			50
55	70.0	7,800	75.5	5,900			55
60	68.0	7,300	73.5	5,600			60
65	66.0	6,800	71.5	5,300	76.5	4,300	65
70	64.0	6,300	69.5	5,000	74.5	4,100	70
75	62.0	6,000	67.0	4,800	72.0	4,000	75
80	60.0	5,600	65.0	4,600	70.0	3,800	80
85	58.0	5,300	63.0	4,400	68.0	3,700	85
90	55.5	5,000	60.5	4,200	65.5	3,600	90
95	53.5	4,800	58.5	4,000	63.0	3,500	95
100	51.0	4,500	56.0	3,900	60.5	3,400	100
105	48.5	4,300	53.5	3,700	58.0	3,300	105
110	45.5	4,100	50.5	3,600	55.0	3,200	110
115	42.5	3,600	48.0	3,500	52.0	3,100	115
120	39.5	3,100	45.0	3,300	49.0	3,100	120
125	36.5	2,700	41.5	3,100	45.5	3,000	125
130	32.5	2,400	38.0	2,700	41.5	2,900	130
135	28.5	2,000	33.5	2,300	36.5	2,400	135
140	24.0	1,700	28.5	1,900	30.0	2,000	140
145	17.5	1,400	21.5	1,600			145

⚠ WARNING

Do Not Lower 61 Ft. Offset Fly In Working Position Below 14 Degrees Unless Main Boom Length Is 92 Ft. Or Less, Since Loss Of Stability Will Occur Causing A Tipping Condition.

Note: Refer To Page 8 For "Lifting Capacity Deductions" For Capacity Reductions Caused By Stowed Or Erected Auxiliary Load Handling Equipment.

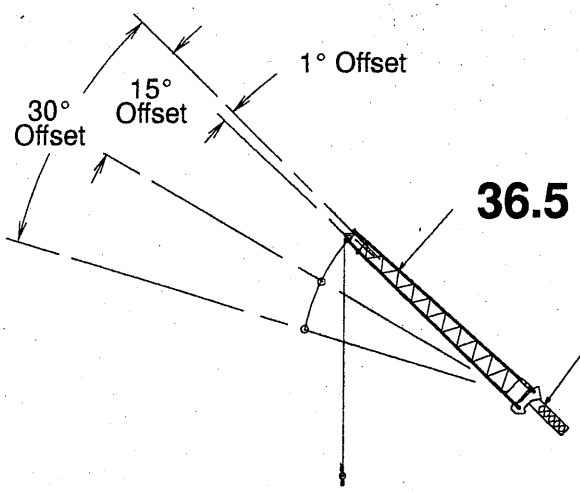

36.5 Ft. Offset Fly

115 Ft. Main Boom

BOOM MODE "B"
8,000# COUNTERWEIGHT

Maximum Allowable Lifting Capacities
Rated Lifting Capacities In Pounds
On Fully Extended Outriggers
See Set Up Note 2.

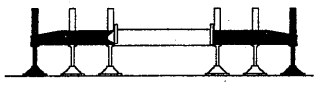

115 Ft. Main Boom + 36.5 Ft. Offset Fly

Load Radius In Feet	1° Offset		15° Offset		30° Offset		Load Radius In Feet
	Loaded Boom Angle (Deg.)	360°	Loaded Boom Angle (Deg.)	360°	Loaded Boom Angle (Deg.)	360°	
35	76.5	10,500					35
40	75.0	10,500					40
45	73.0	10,500	76.5	10,100			45
50	71.5	10,500	75.0	10,100	78.0*	8,700	50
55	69.5	10,500	73.0	10,100	76.0	8,400	55
60	67.5	10,500	71.0	10,100	74.0	8,100	60
65	66.0	10,300	69.0	9,700	71.5	7,800	65
70	63.5	9,500	67.0	9,300	69.5	7,600	70
75	61.5	8,700	65.0	8,900	67.5	7,400	75
80	59.0	7,600	62.5	8,200	65.0	7,100	80
85	56.5	6,600	60.0	7,100	63.0	7,000	85
90	54.0	5,700	57.5	6,200	60.5	6,700	90
95	51.5	5,000	54.5	5,400	57.5	5,800	95
100	48.5	4,300	52.0	4,700	55.0	5,100	100
105	45.5	3,700	49.0	4,100	52.0	4,400	105
110	42.5	3,200	46.0	3,500	48.5	3,800	110
115	39.5	2,700	43.0	3,000	45.5	3,200	115
120	36.0	2,300	39.5	2,500	41.5	2,700	120
125	32.5	1,900	35.5	2,100	37.5	2,200	125
130			31.5	1,700	33.0	1,800	130

⚠ WARNING

Do Not Lower 36.5 Ft. Offset Fly In Working Position Below 28 Degrees Unless Main Boom Length Is 101 Ft. Or Less, Since Loss Of Stability Will Occur Causing A Tipping Condition.

Note: Refer To Page 8 For "Lifting Capacity Deductions" For Capacity Reductions Caused By Stowed Or Erected Auxiliary Load Handling Equipment.

*** This capacity based on maximum obtainable boom angle.**

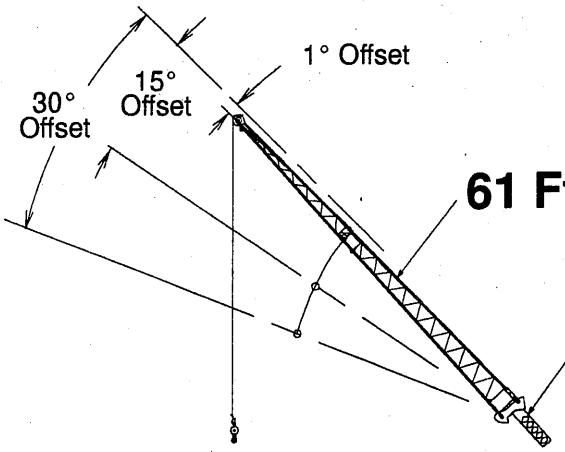

BOOM MODE "B"
8,000# COUNTERWEIGHT

Maximum Allowable Lifting Capacities
Rated Lifting Capacities In Pounds
On Fully Extended Outriggers
See Set Up Note 2.

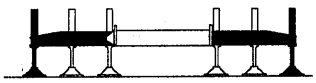

115 Ft. Main Boom + 61 Ft. Offset Fly

Load Radius In Feet	1° Offset		15° Offset		30° Offset		Load Radius In Feet
	Loaded Boom Angle (Deg.)	360°	Loaded Boom Angle (Deg.)	360°	Loaded Boom Angle (Deg.)	360°	
40	77.5	7,100					40
45	76.0	7,100					45
50	74.5	7,100					50
55	73.0	7,100					55
60	71.5	7,100	76.5	6,000			60
65	70.0	7,100	75.0	5,700			65
70	68.5	7,100	73.0	5,400	77.5	4,300	70
75	67.0	6,700	71.5	5,200	76.0	4,200	75
80	65.5	6,300	69.5	4,900	74.0	4,000	80
85	63.5	6,000	68.0	4,700	72.0	3,900	85
90	62.0	5,700	66.0	4,500	70.5	3,800	90
95	60.0	5,400	64.0	4,400	68.5	3,700	95
100	58.0	4,800	62.5	4,200	66.5	3,600	100
105	55.5	4,200	60.5	4,100	64.5	3,500	105
110	53.5	3,700	58.0	3,900	62.0	3,400	110
115	51.0	3,200	56.0	3,800	60.0	3,300	115
120	48.5	2,800	53.5	3,300	57.5	3,200	120
125	46.0	2,400	51.0	2,800	55.5	3,200	125
130	43.5	2,000	48.5	2,400	52.5	2,800	130
135	40.5	1,700	45.5	2,000	49.5	2,300	135
140	38.0	1,300	42.5	1,700	46.0	1,900	140
145			39.5	1,300	42.5	1,600	145

⚠ WARNING

Do Not Lower 61 Ft. Offset Fly In Working Position Below 36 Degrees Unless Main Boom Length Is 92 Ft. Or Less, Since Loss Of Stability Will Occur Causing A Tipping Condition.

Note: Refer To Page 8 For "Lifting Capacity Deductions" For Capacity Reductions Caused By Stowed Or Erected Auxiliary Load Handling Equipment.

This Page Left Blank Intentionally

WORKING RANGE DIAGRAM

Working Range Diagram
On Fully Extended Outriggers

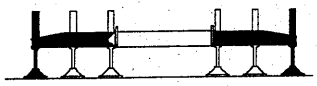

12,000# Counterweight

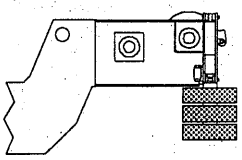

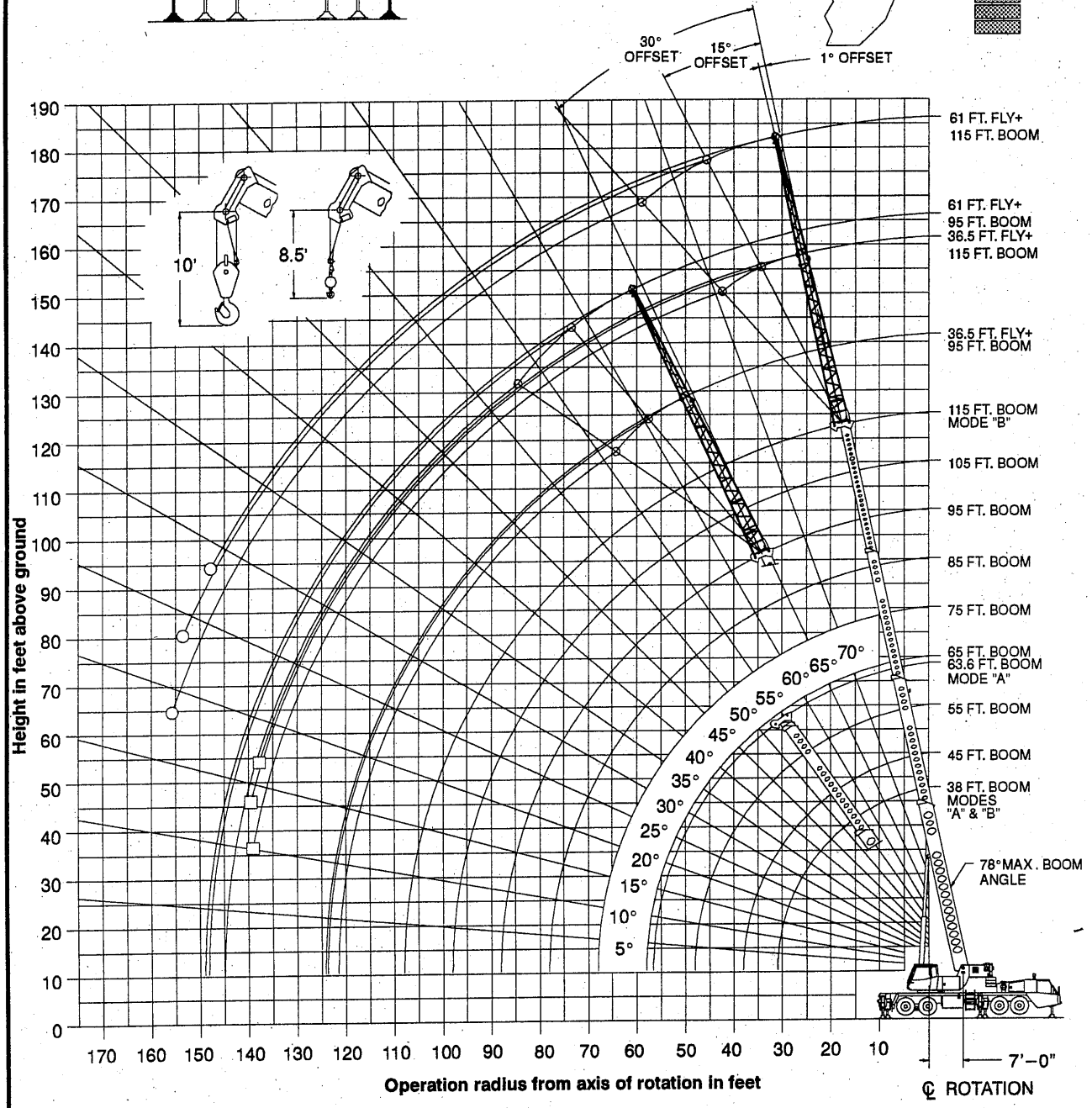

○ **Denotes Main Boom + 61' Fly–Boom Mode "B"**
□ **Denotes Main Boom + 36.5' Fly–Boom Mode "B"**

Note: Boom and fly geometry shown are for unloaded condition and crane standing level on firm supporting surface. Boom deflection, subsequent radius and boom angle change must be accounted for when applying load to hook.

⚠ WARNING

Do Not Lower The Boom Below The Minimum Boom Angle For No Load As Shown In The Lift Charts For The Boom Lengths Given. Loss Of Stability Will Occur Causing A Tipping Condition.

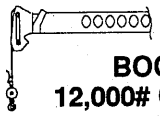

BOOM MODE "A"
12,000# COUNTERWEIGHT

Maximum Allowable Lifting Capacities
Rated Lifting Capacities In Pounds
On Fully Extended Outriggers
See Set Up Note 2.

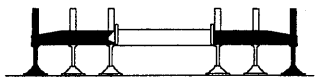

38 Ft. To 45 Ft. Main Boom

Load Radius In Feet	38 Ft.			45 Ft.			Load Radius In Feet
	Loaded Boom Angle (Deg.)	360°	Over Rear	Loaded Boom Angle (Deg.)	360°	Over Rear	
9	69.0	140,000	140,000				9
10	67.0	132,000	132,000	71.0	87,400	87,400	10
12	64.0	115,600	115,600	68.5	87,400	87,400	12
15	58.5	99,300	99,300	64.0	87,400	87,400	15
20	48.5	74,300	74,300	56.5	73,700	73,700	20
25	36.5	57,500	57,500	48.0	56,900	56,900	25
30	17.5	42,100	42,100	38.0	41,600	41,600	30
35				24.5	31,800	31,800	35
Min. Boom Angle/Cap.	0°	26,300	26,300	0°	21,100	21,100	Min. Boom Angle/Cap.

Note: Refer To Page 8 For "Lifting Capacity Deductions" For Capacity Reductions Caused By Stowed Or Erected Auxiliary Load Handling Equipment.

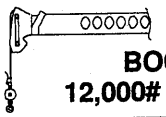

BOOM MODE "A"
12,000# COUNTERWEIGHT

Maximum Allowable Lifting Capacities
Rated Lifting Capacities In Pounds
On Fully Extended Outriggers
See Set Up Note 2.

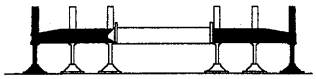

55 Ft. To 63.6 Ft. Main Boom

Load Radius In Feet	55 Ft.			63.6 Ft.			Load Radius In Feet
	Loaded Boom Angle (Deg.)	360°	Over Rear	Loaded Boom Angle (Deg.)	360°	Over Rear	
10	75.0	85,600	85,600				10
12	73.0	85,600	85,600	75.5	56,300	56,300	12
15	69.5	85,600	85,600	73.0	56,300	56,300	15
20	63.5	72,900	73,000	68.0	53,000	53,000	20
25	57.5	56,300	56,300	63.0	44,900	44,900	25
30	50.5	40,900	40,900	57.5	38,700	38,700	30
35	43.0	31,300	31,300	51.5	30,900	30,900	35
40	34.5	24,700	24,700	45.5	24,400	24,400	40
45	22.0	19,900	19,900	38.0	19,600	19,600	45
50				29.0	16,000	16,000	50
55				16.0	13,100	13,100	55
Min. Boom Angle/Cap.	0°	14,800	14,800	0°	11,000	11,000	Min. Boom Angle/Cap.

Note: Refer To Page 8 For "Lifting Capacity Deductions" For Capacity Reductions Caused By Stowed Or Erected Auxiliary Load Handling Equipment.

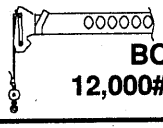

BOOM MODE "B"
12,000# COUNTERWEIGHT

Maximum Allowable Lifting Capacities
Rated Lifting Capacities In Pounds
On Fully Extended Outriggers
See Set Up Note 2.

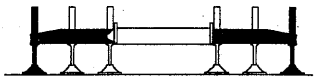

38 Ft. To 55 Ft. Main Boom

Load Radius In Feet	38 Ft.			45 Ft.			55 Ft.			Load Radius In Feet
	Loaded Boom Angle (Deg.)	360°	Over Rear	Loaded Boom Angle (Deg.)	360°	Over Rear	Loaded Boom Angle (Deg.)	360°	Over Rear	
9	69.0	140,000	140,000							9
10	67.0	132,000	132,000	71.0	42,000	42,000	74.5	42,000	42,000	10
12	64.0	115,600	115,600	68.0	42,000	42,000	72.5	42,000	42,000	12
15	58.5	99,300	99,300	64.0	42,000	42,000	69.0	42,000	42,000	15
20	48.5	74,300	74,300	56.5	42,000	42,000	63.5	42,000	42,000	20
25	36.5	57,500	57,500	48.0	42,000	42,000	57.5	42,000	42,000	25
30	17.5	42,100	42,100	38.0	42,000	42,000	50.5	42,000	42,000	30
35				24.5	32,900	32,900	43.0	33,500	33,500	35
40							34.0	26,700	26,700	40
45							22.0	21,900	21,900	45
Min. Boom Angle/ Cap.	0°	26,300	26,300	0°	20,100	20,100	0°	14,400	14,400	Min. Boom Angle/ Cap.

65 Ft. To 85 Ft. Main Boom

Load Radius In Feet	65 Ft.			75 Ft.			85 Ft.			Load Radius In Feet
	Loaded Boom Angle (Deg.)	360°	Over Rear	Loaded Boom Angle (Deg.)	360°	Over Rear	Loaded Boom Angle (Deg.)	360°	Over Rear	
12	75.5	42,000	42,000							12
15	73.0	42,000	42,000	75.5	42,000	42,000	77.5	42,000	42,000	15
20	68.0	42,000	42,000	71.5	42,000	42,000	74.5	42,000	42,000	20
25	63.5	42,000	42,000	68.0	42,000	42,000	71.0	41,800	41,800	25
30	58.0	42,000	42,000	63.5	42,000	42,000	67.0	36,900	36,900	30
35	52.5	33,800	33,800	58.5	34,000	34,000	63.5	32,900	32,900	35
40	46.5	27,100	27,100	54.0	27,300	27,300	59.5	27,400	27,400	40
45	39.5	22,200	22,200	48.5	22,500	22,500	55.0	22,600	22,600	45
50	31.5	18,600	18,600	43.0	18,800	18,800	50.5	18,900	18,900	50
55	20.0	15,700	15,700	37.0	15,900	15,900	46.0	16,000	16,000	55
60				29.0	13,500	13,500	40.5	13,700	13,700	60
65				19.0	11,600	11,700	34.5	11,800	11,800	65
70							27.5	10,100	10,200	70
75							18.0	8,700	8,900	75
Min. Boom Angle/ Cap.	0°	10,700	10,700	0°	8,100	8,100	0°	6,100	6,100	Min. Boom Angle/ Cap.

Note: Refer To Page 8 For "Lifting Capacity Deductions" For Capacity Reductions Caused By Stowed Or Erected Auxiliary Load Handling Equipment.

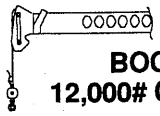

BOOM MODE "B"
12,000# COUNTERWEIGHT

Maximum Allowable Lifting Capacities
Rated Lifting Capacities In Pounds
On Fully Extended Outriggers
See Set Up Note 2.

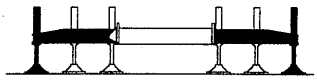

95 Ft. To 115 Ft. Main Boom

Load Radius In Feet	95 Ft.			105 Ft.			115 Ft.			Load Radius In Feet
	Loaded Boom Angle (Deg.)	360°	Over Rear	Loaded Boom Angle (Deg)	360°	Over Rear	Loaded Boom Angle (Deg.)	360°	Over Rear	
20	76.5	38,600	38,600							20
25	73.5	33,800	33,800	75.5	30,300	30,300	77.0	24,500	24,500	25
30	70.0	29,800	29,800	72.5	27,000	27,000	74.5	24,500	24,500	30
35	67.0	26,600	26,600	69.5	24,100	24,100	72.0	22,200	22,200	35
40	63.5	23,900	23,900	66.5	21,700	21,700	69.5	20,000	20,000	40
45	60.0	21,700	21,700	63.5	19,600	19,600	66.5	18,100	18,100	45
50	56.0	19,000	19,000	60.5	17,900	17,900	63.5	16,300	16,300	50
55	52.0	16,100	16,100	57.0	16,200	16,200	61.0	14,900	14,900	55
60	48.0	13,800	13,800	53.5	13,900	13,900	58.0	13,600	13,600	60
65	43.5	11,900	12,000	49.5	12,000	12,100	54.5	12,000	12,100	65
70	38.5	10,200	10,400	46.0	10,300	10,400	51.0	10,400	10,500	70
75	33.0	8,800	9,000	41.5	8,900	9,100	47.5	9,000	9,200	75
80	26.5	7,600	7,800	37.0	7,700	7,900	44.0	7,800	8,000	80
85	17.0	6,500	6,800	31.5	6,600	6,900	40.0	6,700	7,000	85
90				25.0	5,700	6,000	35.5	5,800	6,100	90
95				16.5	4,900	5,200	30.5	5,000	5,300	95
100							24.5	4,300	4,600	100
105							16.0	3,700	4,000	105
Min. Boom Angle/ Cap.	0°	4,700	4,700	0°	3,500	3,500	0°	2,500	2,500	Min. Boom Angle/ Cap.

Note: Refer To Page 8 For "Lifting Capacity Deductions" For Capacity Reductions Caused By Stowed Or Erected Auxiliary Load Handling Equipment.

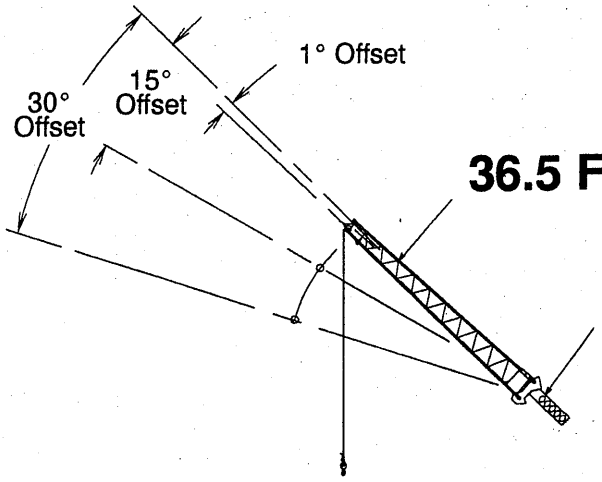

36.5 Ft. Offset Fly

95 Ft. Main Boom

BOOM MODE "B"
12,000# COUNTERWEIGHT

Maximum Allowable Lifting Capacities
Rated Lifting Capacities In Pounds
On Fully Extended Outriggers
See Set Up Note 2.

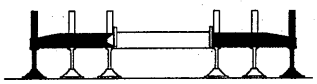

95 Ft. Main Boom + 36.5 Ft. Offset Fly

Load Radius In Feet	1° Offset		15° Offset		30° Offset		Load Radius In Feet
	Loaded Boom Angle (Deg.)	360°	Loaded Boom Angle (Deg.)	360°	Loaded Boom Angle (Deg.)	360°	
30	76.5	16,900					30
35	74.0	15,700	77.5	11,900			35
40	72.0	14,600	75.5	11,300			40
45	70.0	13,700	73.5	10,700	77.0	8,700	45
50	67.5	12,800	71.0	10,300	74.5	8,300	50
55	65.0	12,100	68.5	9,800	72.0	8,000	55
60	62.5	11,400	66.0	9,400	69.5	7,700	60
65	60.0	10,800	63.5	8,900	67.0	7,400	65
70	57.5	10,300	61.0	8,500	64.5	7,200	70
75	55.0	9,800	58.5	8,100	61.5	6,900	75
80	52.0	9,000	55.5	7,800	58.5	6,700	80
85	49.0	8,000	52.5	7,400	55.5	6,600	85
90	45.5	7,100	49.5	7,200	52.5	6,400	90
95	42.5	6,200	46.0	6,600	49.0	6,300	95
100	38.5	5,500	42.5	5,800	45.0	6,000	100
105	34.5	4,900	38.5	5,100	41.0	5,400	105
110	30.0	4,300	33.5	4,500	36.0	4,700	110
115	25.0	3,800	28.5	3,900	30.0	4,000	115
120	18.0	3,300	21.0	3,400			120
Min. Boom Angle/Cap.	0°	1,700	0°	1,700	0°	1,800	Min. Boom Angle/Cap.

Note: Refer To Page 8 For "Lifting Capacity Deductions" For Capacity Reductions Caused By Stowed Or Erected Auxiliary Load Handling Equipment.

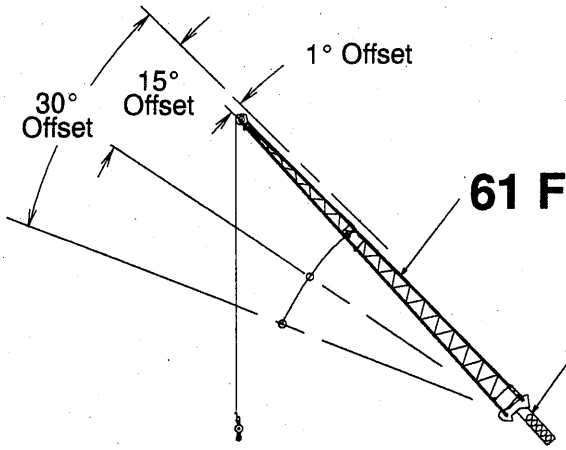

BOOM MODE "B"
12,000# COUNTERWEIGHT

Maximum Allowable Lifting Capacities
Rated Lifting Capacities In Pounds
On Fully Extended Outriggers
See Set Up Note 2.

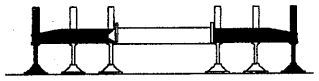

95 Ft. Main Boom + 61 Ft. Offset Fly

Load Radius In Feet	1° Offset		15° Offset		30° Offset		Load Radius In Feet
	Loaded Boom Angle (Deg.)	360°	Loaded Boom Angle (Deg.)	360°	Loaded Boom Angle (Deg.)	360°	
35	77.5	9,500					35
40	75.5	9,500					40
45	74.0	9,000					45
50	72.0	8,400	77.0	6,200			50
55	70.0	7,800	75.5	5,900			55
60	68.0	7,300	73.5	5,600			60
65	66.0	6,800	71.5	5,300	76.5	4,300	65
70	64.0	6,300	69.5	5,000	74.5	4,100	70
75	62.0	6,000	67.0	4,800	72.0	4,000	75
80	60.0	5,600	65.0	4,600	70.0	3,800	80
85	58.0	5,300	63.0	4,400	68.0	3,700	85
90	55.5	5,000	60.5	4,200	65.5	3,600	90
95	53.5	4,800	58.5	4,000	63.0	3,500	95
100	51.0	4,500	56.0	3,900	60.5	3,400	100
105	48.5	4,300	53.5	3,700	58.0	3,300	105
110	45.5	4,100	50.5	3,600	55.0	3,200	110
115	43.0	3,900	48.0	3,500	52.0	3,100	115
120	40.0	3,700	45.0	3,300	49.0	3,100	120
125	36.5	3,500	41.5	3,200	45.5	3,000	125
130	33.0	3,100	38.0	3,200	41.5	3,000	130
135	29.0	2,700	34.0	2,900	37.0	3,000	135
140	24.0	2,400	29.0	2,600	30.5	2,600	140
145	17.5	2,100	22.0	2,200			145
Min. Boom Angle/Cap.	0°	700	0°	700	0°	800	Min. Boom Angle/Cap.

Note: Refer To Page 8 For "Lifting Capacity Deductions" For Capacity Reductions Caused By Stowed Or Erected Auxiliary Load Handling Equipment.

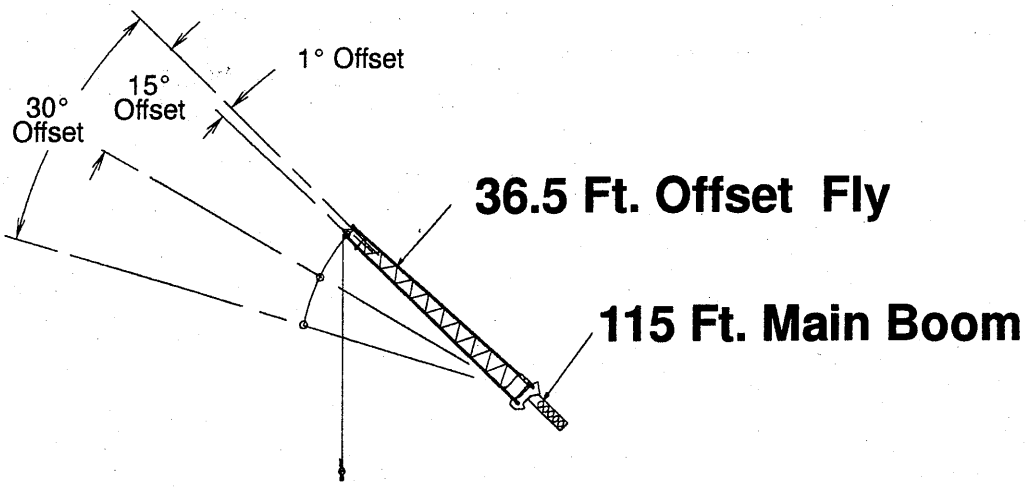

BOOM MODE "B"
12,000# COUNTERWEIGHT

Maximum Allowable Lifting Capacities
Rated Lifting Capacities In Pounds
On Fully Extended Outriggers
See Set Up Note 2.

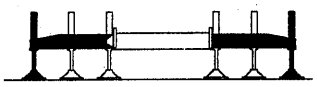

115 Ft. Main Boom + 36.5 Ft. Offset Fly

Load Radius In Feet	1° Offset		15° Offset		30° Offset		Load Radius In Feet
	Loaded Boom Angle (Deg.)	360°	Loaded Boom Angle (Deg.)	360°	Loaded Boom Angle (Deg.)	360°	
35	76.5	10,500					35
40	75.0	10,500					40
45	73.0	10,500	76.5	10,100			45
50	71.5	10,500	75.0	10,100	78.0*	8,700	50
55	69.5	10,500	73.0	10,100	76.0	8,400	55
60	67.5	10,500	71.0	10,100	74.0	8,100	60
65	66.0	10,300	69.0	9,700	71.5	7,800	65
70	63.5	9,500	67.0	9,300	69.5	7,600	70
75	61.5	8,700	65.0	8,900	67.5	7,400	75
80	59.0	8,100	62.5	8,200	65.0	7,100	80
85	57.0	7,400	60.0	7,600	63.0	7,000	85
90	54.5	6,800	57.5	7,000	60.5	6,800	90
95	51.5	6,000	55.0	6,400	58.0	6,600	95
100	49.0	5,200	52.5	5,700	55.5	6,000	100
105	46.0	4,600	49.5	5,000	52.0	5,300	105
110	43.0	4,000	46.5	4,400	49.0	4,600	110
115	40.0	3,500	43.0	3,800	45.5	4,000	115
120	36.5	3,000	39.5	3,300	42.0	3,500	120
125	33.0	2,600	36.0	2,800	38.0	3,000	125
130	28.5	2,200	31.5	2,400	33.5	2,500	130
135	23.5	1,900	26.5	2,000	27.5	2,000	135

⚠ WARNING

Do Not Lower 36.5 Ft. Offset Fly In Working Position Below 17.5 Degrees Unless Main Boom Length Is 109 Ft. Or Less, Since Loss Of Stability Will Occur Causing A Tipping Condition.

Note: Refer To Page 8 For "Lifting Capacity Deductions" For Capacity Reductions Caused By Stowed Or Erected Auxiliary Load Handling Equipment.

*** This capacity based on maximum obtainable boom angle.**

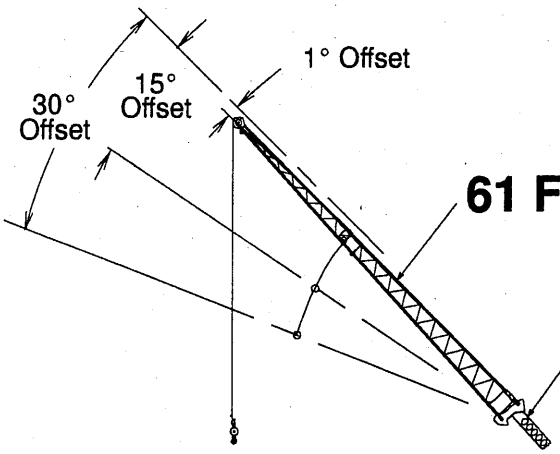

BOOM MODE "B"
12,000# COUNTERWEIGHT

Maximum Allowable Lifting Capacities
Rated Lifting Capacities In Pounds
On Fully Extended Outriggers
See Set Up Note 2.

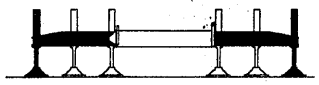

115 Ft. Main Boom + 61 Ft. Offset Fly

Load Radius In Feet	1° Offset		15° Offset		30° Offset		Load Radius In Feet
	Loaded Boom Angle (Deg.)	360°	Loaded Boom Angle (Deg.)	360°	Loaded Boom Angle (Deg.)	360°	
40	77.5	7,100					40
45	76.0	7,100					45
50	74.5	7,100					50
55	73.0	7,100					55
60	71.5	7,100	76.5	6,000			60
65	70.0	7,100	75.0	5,700			65
70	68.5	7,100	73.0	5,400	77.5	4,300	70
75	67.0	6,700	71.5	5,200	76.0	4,200	75
80	65.5	6,300	69.5	4,900	74.0	4,000	80
85	63.5	6,000	68.0	4,700	72.0	3,900	85
90	62.0	5,700	66.0	4,500	70.5	3,800	90
95	60.0	5,400	64.0	4,400	68.5	3,700	95
100	58.0	5,100	62.5	4,200	66.5	3,600	100
105	56.0	4,800	60.5	4,100	64.5	3,500	105
110	53.5	4,400	58.0	3,900	62.0	3,400	110
115	51.5	4,000	56.0	3,800	60.0	3,300	115
120	49.0	3,500	54.0	3,700	57.5	3,200	120
125	46.5	3,100	51.5	3,500	55.5	3,200	125
130	44.0	2,700	49.0	3,100	52.5	3,100	130
135	41.0	2,300	46.0	2,700	50.0	3,000	135
140	38.0	2,000	43.0	2,300	46.5	2,600	140
145	35.0	1,700	39.5	2,000	43.0	2,200	145
150	31.5	1,400	36.0	1,600	39.0	1,800	150
155			32.5	1,300	34.5	1,500	155

⚠ WARNING

Do Not Lower 61 Ft. Offset Fly In Working Position Below 29 Degrees Unless Main Boom Length Is 100 Ft. Or Less, Since Loss Of Stability Will Occur Causing A Tipping Condition.

Note: Refer To Page 8 For "Lifting Capacity Deductions" For Capacity Reductions Caused By Stowed Or Erected Auxiliary Load Handling Equipment.

This Page Left Blank Intentionally

X

WORKING RANGE DIAGRAM

Working Range Diagram On Fully Extended Outriggers

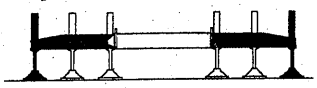

16,000# Counterweight

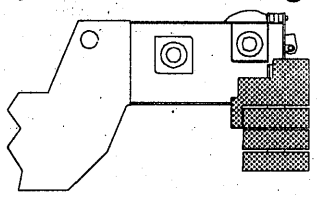

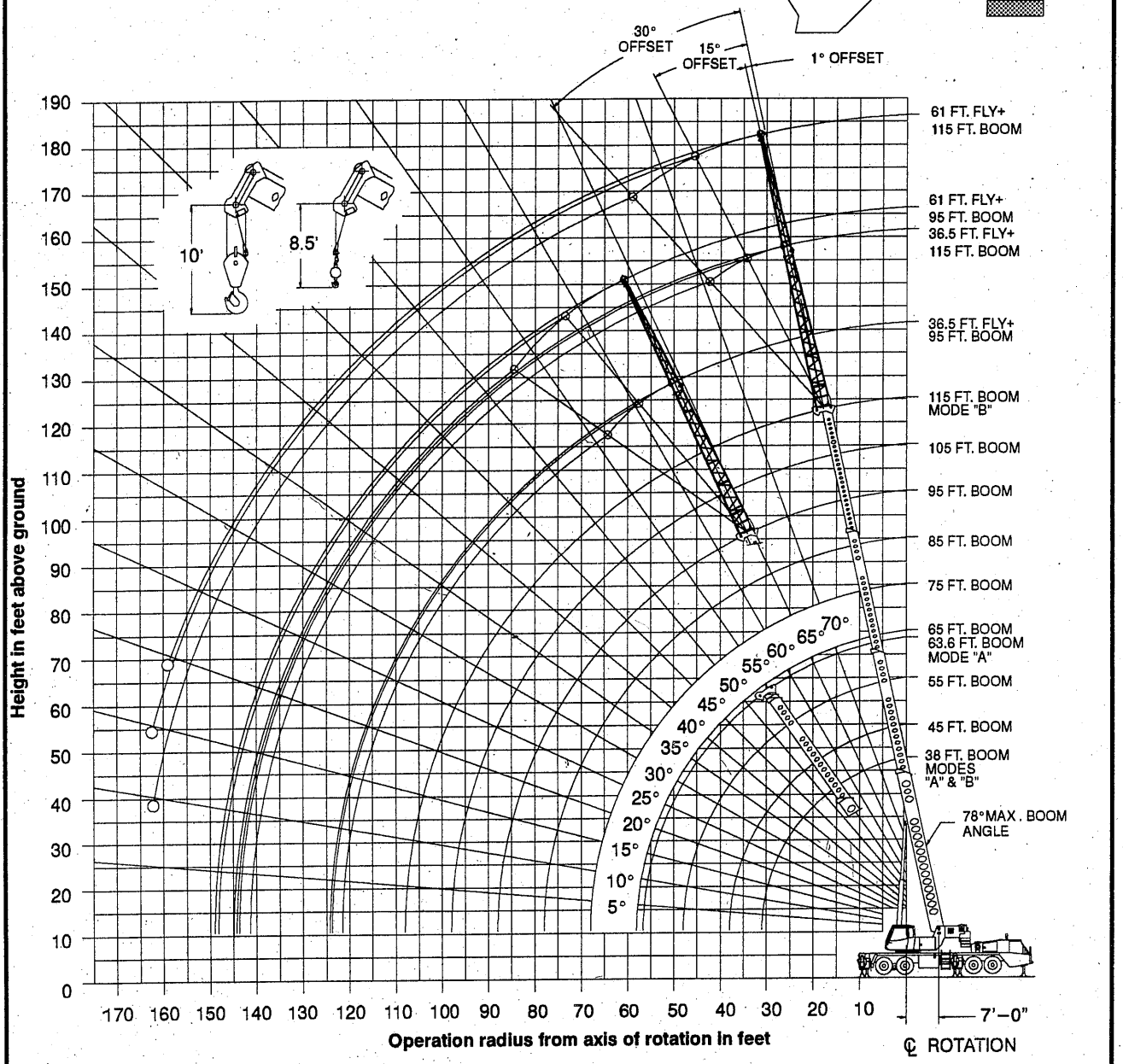

○ **Denotes Main Boom + 61' Fly–Boom Mode "B"**

Note: Boom and fly geometry shown are for unloaded condition and crane standing level on firm supporting surface. Boom deflection, subsequent radius and boom angle change must be accounted for when applying load to hook.

⚠ WARNING

Do Not Lower The Boom Below The Minimum Boom Angle For No Load As Shown In The Lift Charts For The Boom Lengths Given. Loss Of Stability Will Occur Causing A Tipping Condition.

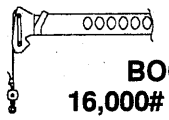

BOOM MODE "A"
16,000# COUNTERWEIGHT

Maximum Allowable Lifting Capacities
Rated Lifting Capacities In Pounds
On Fully Extended Outriggers
See Set Up Note 2.

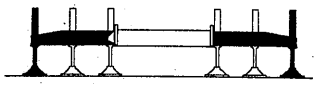

38 Ft. To 45 Ft. Main Boom

Load Radius In Feet	38 Ft.			45 Ft.			Load Radius In Feet
	Loaded Boom Angle (Deg.)	360°	Over Rear	Loaded Boom Angle (Deg.)	360°	Over Rear	
9	69.0	140,000	140,000				9
10	67.0	132,000	132,000	71.0	87,400	87,400	10
12	64.0	117,900	117,900	68.5	87,400	87,400	12
15	58.5	101,300	101,300	64.0	87,400	87,400	15
20	48.5	76,600	76,600	56.5	76,000	76,000	20
25	36.5	59,400	59,400	48.0	58,900	58,900	25
30	17.5	45,600	45,600	38.0	45,100	45,100	30
35				24.5	34,600	34,600	35
Min. Boom Angle/Cap.	0°	26,300	26,300	0°	21,100	21,100	Min. Boom Angle/Cap.

Note: Refer To Page 8 For "Lifting Capacity Deductions" For Capacity Reductions Caused By Stowed Or Erected Auxiliary Load Handling Equi7pment.

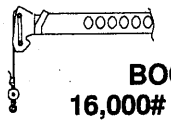

BOOM MODE "A"
16,000# COUNTERWEIGHT

Maximum Allowable Lifting Capacities
Rated Lifting Capacities In Pounds
On Fully Extended Outriggers
See Set Up Note 2.

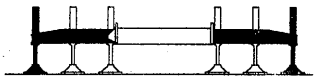

55 Ft. To 63.6 Ft. Main Boom

Load Radius In Feet	55 Ft.			63.6 Ft.			Load Radius In Feet
	Loaded Boom Angle (Deg.)	360°	Over Rear	Loaded Boom Angle (Deg.)	360°	Over Rear	
10	75.0	85,600	85,600				10
12	73.0	85,600	85,600	75.5	56,300	56,300	12
15	69.5	85,600	85,600	73.0	56,300	56,300	15
20	64.0	75,300	75,300	68.0	53,000	53,000	20
25	57.5	58,300	58,300	63.0	44,900	44,900	25
30	51.0	44,400	44,400	57.5	38,700	38,700	30
35	43.0	34,100	34,100	51.5	33,700	33,700	35
40	34.5	27,000	27,000	45.5	26,700	26,700	40
45	22.0	21,900	21,900	38.0	21,600	21,600	45
50				29.0	17,800	17,800	50
55				16.0	14,700	14,700	55
Min. Boom Angle/Cap.	0°	14,800	14,800	0°	11,000	11,000	Min. Boom Angle/Cap.

Note: Refer To Page 8 For "Lifting Capacity Deductions" For Capacity Reductions Caused By Stowed Or Erected Auxiliary Load Handling Equipment.

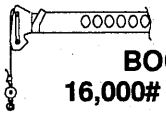

BOOM MODE "B"
16,000# COUNTERWEIGHT

Maximum Allowable Lifting Capacities
Rated Lifting Capacities In Pounds
On Fully Extended Outriggers
See Set Up Note 2.

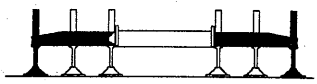

38 Ft. To 55 Ft. Main Boom

Load Radius In Feet	38 Ft.			45 Ft.			55 Ft.			Load Radius In Feet
	Loaded Boom Angle (Deg.)	360°	Over Rear	Loaded Boom Angle (Deg.)	360°	Over Rear	Loaded Boom Angle (Deg.)	360°	Over Rear	
9	69.0	140,000	140,000							9
10	67.0	132,000	132,000	71.0	42,000	42,000	74.5	42,000	42,000	10
12	64.0	117,900	117,900	68.0	42,000	42,000	72.5	42,000	42,000	12
15	58.5	101,300	101,300	64.0	42,000	42,000	69.0	42,000	42,000	15
20	48.5	76,600	76,600	56.5	42,000	42,000	63.5	42,000	42,000	20
25	36.5	59,400	59,400	48.0	42,000	42,000	57.5	42,000	42,000	25
30	17.5	45,600	45,600	38.0	42,000	42,000	50.5	42,000	42,000	30
35				24.5	35,700	35,700	43.0	36,300	36,300	35
40							34.0	29,100	29,100	40
45							22.0	23,900	23,900	45
Min. Boom Angle/ Cap.	0°	26,300	26,300	0°	20,100	20,100	0°	14,400	14,400	Min. Boom Angle/ Cap.

65 Ft. To 85 Ft. Main Boom

Load Radius In Feet	65 Ft.			75 Ft.			85 Ft.			Load Radius In Feet
	Loaded Boom Angle (Deg.)	360°	Over Rear	Loaded Boom Angle (Deg.)	360°	Over Rear	Loaded Boom Angle (Deg.)	360°	Over Rear	
12	75.5	42,000	42,000							12
15	73.0	42,000	42,000	75.5	42,000	42,000	77.5	42,000	42,000	15
20	68.0	42,000	42,000	71.5	42,000	42,000	74.5	42,000	42,000	20
25	63.5	42,000	42,000	68.0	42,000	42,000	71.0	41,800	41,800	25
30	58.0	42,000	42,000	63.5	42,000	42,000	67.0	36,900	36,900	30
35	52.5	36,600	36,600	59.0	36,800	36,800	63.5	32,900	32,900	35
40	46.5	29,400	29,400	54.0	29,600	29,600	59.5	29,700	29,700	40
45	39.5	24,300	24,300	49.0	24,500	24,500	55.0	24,600	24,600	45
50	31.5	20,300	20,300	43.0	20,600	20,600	50.5	20,700	20,700	50
55	20.0	17,200	17,200	37.0	17,500	17,500	46.0	17,600	17,600	55
60				29.5	15,000	15,000	40.5	15,100	15,100	60
65				19.0	12,900	12,900	34.5	13,100	13,100	65
70							27.5	11,400	11,400	70
75							18.0	10,000	10,000	75
Min. Boom Angle/ Cap.	0°	10,700	10,700	0°	8,100	8,100	0°	6,100	6,100	Min. Boom Angle/ Cap.

Note: Refer To Page 8 For "Lifting Capacity Deductions" For Capacity Reductions Caused By Stowed Or Erected Auxiliary Load Handling Equipment.

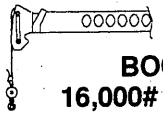

BOOM MODE "B"
16,000# COUNTERWEIGHT

Maximum Allowable Lifting Capacities
Rated Lifting Capacities In Pounds
On Fully Extended Outriggers
See Set Up Note 2.

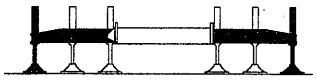

95 Ft. To 115 Ft. Main Boom

Load Radius In Feet	95 Ft.			105 Ft.			115 Ft.			Load Radius In Feet
	Loaded Boom Angle (Deg.)	360°	Over Rear	Loaded Boom Angle (Deg)	360°	Over Rear	Loaded Boom Angle (Deg.)	360°	Over Rear	
20	76.5	38,600	38,600							20
25	73.5	33,800	33,800	75.5	30,300	30,300	77.0	24,500	24,500	25
30	70.0	29,800	29,800	72.5	27,000	27,000	74.5	24,500	24,500	30
35	67.0	26,600	26,600	69.5	24,100	24,100	72.0	22,200	22,200	35
40	63.5	23,900	23,900	66.5	21,700	21,700	69.5	20,000	20,000	40
45	60.0	21,700	21,700	63.5	19,600	19,600	66.5	18,100	18,100	45
50	56.0	19,800	19,800	60.5	17,900	17,900	63.5	16,300	16,300	50
55	52.5	17,700	17,700	57.0	16,200	16,200	61.0	14,900	14,900	55
60	48.0	15,200	15,200	53.5	14,900	14,900	58.0	13,600	13,600	60
65	43.5	13,200	13,200	50.0	13,300	13,300	54.5	12,500	12,500	65
70	38.5	11,600	11,600	46.0	11,600	11,600	51.5	11,600	11,600	70
75	33.0	10,100	10,100	41.5	10,200	10,200	48.0	10,300	10,300	75
80	26.5	8,800	8,900	37.0	8,900	8,900	44.0	9,000	9,000	80
85	17.0	7,700	7,800	31.5	7,800	7,900	40.0	7,800	7,900	85
90				25.5	6,800	6,900	35.5	6,900	7,000	90
95				16.5	5,900	6,100	30.5	6,000	6,100	95
100							24.5	5,200	5,400	100
105							16.0	4,600	4,700	105
Min. Boom Angle/ Cap.	0°	4,700	4,700	0°	3,500	3,500	0°	2,500	2,500	Min. Boom Angle/ Cap.

Note: Refer To Page 8 For "Lifting Capacity Deductions" For Capacity Reductions Caused By Stowed Or Erected Auxiliary Load Handling Equipment.

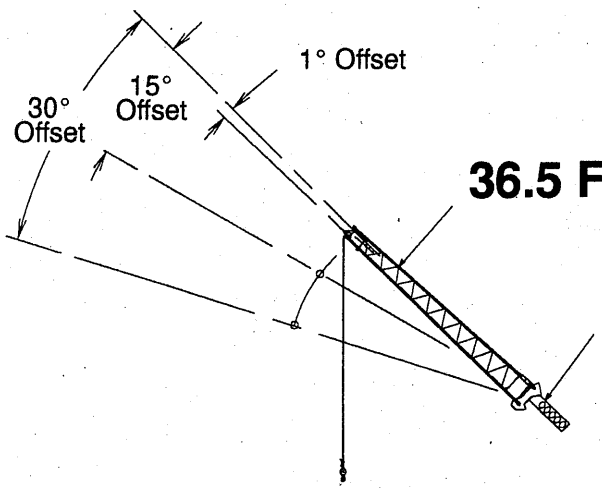

36.5 Ft. Offset Fly

95 Ft. Main Boom

BOOM MODE "B"
16,000# COUNTERWEIGHT

Maximum Allowable Lifting Capacities
Rated Lifting Capacities In Pounds
On Fully Extended Outriggers
See Set Up Note 2.

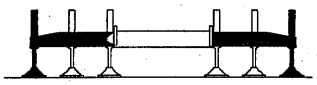

95 Ft. Main Boom + 36.5 Ft. Offset Fly

Load Radius In Feet	1° Offset		15° Offset		30° Offset		Load Radius In Feet
	Loaded Boom Angle (Deg.)	360°	Loaded Boom Angle (Deg.)	360°	Loaded Boom Angle (Deg.)	360°	
30	76.5	16,900					30
35	74.0	15,700	77.5	11,900			35
40	72.0	14,600	75.5	11,300			40
45	70.0	13,700	73.5	10,700	77.0	8,700	45
50	67.5	12,800	71.0	10,300	74.5	8,300	50
55	65.0	12,100	68.5	9,800	72.0	8,000	55
60	62.5	11,400	66.0	9,400	69.5	7,700	60
65	60.0	10,800	63.5	8,900	67.0	7,400	65
70	57.5	10,300	61.0	8,500	64.5	7,200	70
75	55.0	9,800	58.5	8,100	61.5	6,900	75
80	52.0	9,300	55.5	7,800	58.5	6,700	80
85	49.0	8,800	52.5	7,400	55.5	6,600	85
90	46.0	8,100	49.5	7,200	52.5	6,400	90
95	42.5	7,200	46.0	6,900	49.0	6,300	95
100	39.0	6,500	42.5	6,700	45.0	6,000	100
105	35.0	5,800	38.5	6,000	41.0	6,000	105
110	30.5	5,100	34.0	5,400	36.0	5,500	110
115	25.0	4,600	28.5	4,800	30.0	4,800	115
120	18.5	4,100	21.5	4,200			120
Min. Boom Angle/Cap.	0°	1,700	0°	1,700	0°	1,800	Min. Boom Angle/Cap.

Note: Refer To Page 8 For "Lifting Capacity Deductions" For Capacity Reductions Caused By Stowed Or Erected Auxiliary Load Handling Equipment.

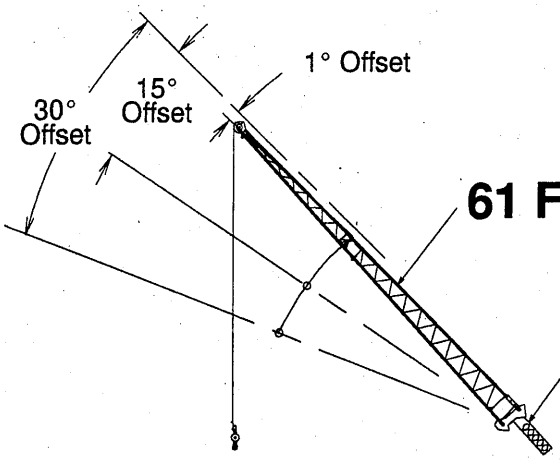

BOOM MODE "B" 16,000# COUNTERWEIGHT	Maximum Allowable Lifting Capacities Rated Lifting Capacities In Pounds On Fully Extended Outriggers See Set Up Note 2.						
95 Ft. Main Boom + 61 Ft. Offset Fly							
Load Radius In Feet	1° Offset		15° Offset		30° Offset		Load Radius In Feet
	Loaded Boom Angle (Deg.)	360°	Loaded Boom Angle (Deg.)	360°	Loaded Boom Angle (Deg.)	360°	
35	77.5	9,500					35
40	75.5	9,500					40
45	74.0	9,000					45
50	72.0	8,400	77.0	6,200			50
55	70.0	7,800	75.5	5,900			55
60	68.0	7,300	73.5	5,600			60
65	66.0	6,800	71.5	5,300	76.5	4,300	65
70	64.0	6,300	69.5	5,000	74.5	4,100	70
75	62.0	6,000	67.0	4,800	72.0	4,000	75
80	60.0	5,600	65.0	4,600	70.0	3,800	80
85	58.0	5,300	63.0	4,400	68.0	3,700	85
90	55.5	5,000	60.5	4,200	65.5	3,600	90
95	53.5	4,800	58.5	4,000	63.0	3,500	95
100	51.0	4,500	56.0	3,900	60.5	3,400	100
105	48.5	4,300	53.5	3,700	58.0	3,300	105
110	45.5	4,100	50.5	3,600	55.0	3,200	110
115	43.0	3,900	48.0	3,500	52.0	3,100	115
120	40.0	3,700	45.0	3,300	49.0	3,100	120
125	36.5	3,600	41.5	3,200	45.5	3,000	125
130	33.0	3,400	38.0	3,200	41.5	3,000	130
135	29.0	3,300	34.0	3,100	37.0	3,000	135
140	24.5	3,000	29.0	3,000	31.0	3,000	140
145	18.0	2,700	22.0	2,800			145
Min. Boom Angle/Cap.	0°	700	0°	700	0°	800	Min. Boom Angle/Cap.

Note: Refer To Page 8 For "Lifting Capacity Deductions" For Capacity Reductions Caused By Stowed Or Erected Auxiliary Load Handling Equipment.

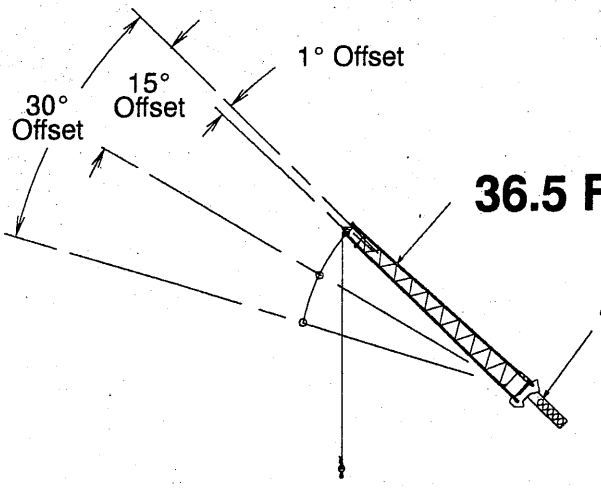

36.5 Ft. Offset Fly

115 Ft. Main Boom

BOOM MODE "B"
16,000# COUNTERWEIGHT

Maximum Allowable Lifting Capacities
Rated Lifting Capacities In Pounds
On Fully Extended Outriggers
See Set Up Note 2.

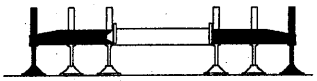

115 Ft. Main Boom + 36.5 Ft. Offset Fly

Load Radius In Feet	1° Offset		15° Offset		30° Offset		Load Radius In Feet
	Loaded Boom Angle (Deg.)	360°	Loaded Boom Angle (Deg.)	360°	Loaded Boom Angle (Deg.)	360°	
35	76.5	10,500					35
40	75.0	10,500					40
45	73.0	10,500	76.5	10,100			45
50	71.5	10,500	75.0	10,100	78.0*	8,700	50
55	69.5	10,500	73.0	10,100	76.0	8,400	55
60	67.5	10,500	71.0	10,100	74.0	8,100	60
65	66.0	10,300	69.0	9,700	71.5	7,800	65
70	63.5	9,500	67.0	9,300	69.5	7,600	70
75	61.5	8,700	65.0	8,900	67.5	7,400	75
80	59.0	8,100	62.5	8,200	65.0	7,100	80
85	57.0	7,400	60.0	7,600	63.0	7,000	85
90	54.5	6,900	57.5	7,000	60.5	6,800	90
95	52.0	6,400	55.0	6,500	58.0	6,600	95
100	49.0	5,900	52.5	6,000	55.5	6,100	100
105	46.5	5,500	49.5	5,600	52.5	5,700	105
110	43.5	4,900	47.0	5,200	49.5	5,200	110
115	40.5	4,300	43.5	4,600	46.0	4,800	115
120	37.0	3,800	40.0	4,100	42.5	4,200	120
125	33.0	3,300	36.5	3,600	38.5	3,700	125
130	29.0	2,900	32.0	3,100	33.5	3,200	130
135	24.0	2,500	27.0	2,700	28.0	2,700	135
140	17.5	2,200	20.5	2,300			140
Min. Boom Angle/Cap.	0°	400	0°	500	0°	500	Min. Boom Angle/Cap.

Note: Refer To Page 8 For "Lifting Capacity Deductions" For Capacity Reductions Caused By Stowed Or Erected Auxiliary Load Handling Equipment.

*** This capacity based on maximum obtainable boom angle.**

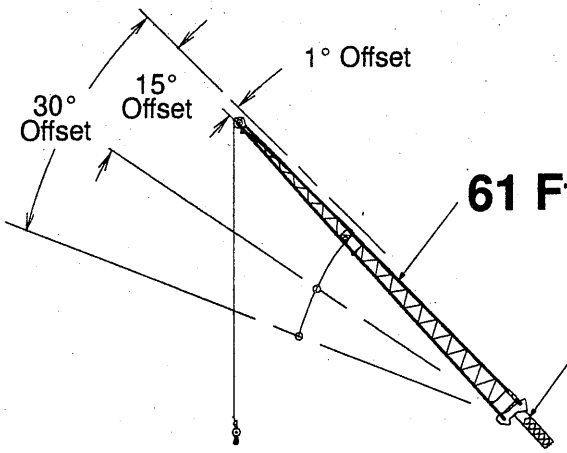

BOOM MODE "B"
16,000# COUNTERWEIGHT

Maximum Allowable Lifting Capacities
Rated Lifting Capacities In Pounds
On Fully Extended Outriggers
See Set Up Note 2.

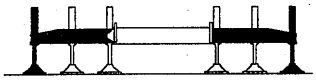

115 Ft. Main Boom + 61 Ft. Offset Fly

Load Radius In Feet	1° Offset		15° Offset		30° Offset		Load Radius In Feet
	Loaded Boom Angle (Deg.)	360°	Loaded Boom Angle (Deg.)	360°	Loaded Boom Angle (Deg.)	360°	
40	77.5	7,100					40
45	76.0	7,100					45
50	74.5	7,100					50
55	73.0	7,100					55
60	71.5	7,100	76.5	6,000			60
65	70.0	7,100	75.0	5,700			65
70	68.5	7,100	73.0	5,400	77.5	4,300	70
75	67.0	6,700	71.5	5,200	76.0	4,200	75
80	65.5	6,300	69.5	4,900	74.0	4,000	80
85	63.5	6,000	68.0	4,700	72.0	3,900	85
90	62.0	5,700	66.0	4,500	70.5	3,800	90
95	60.0	5,400	64.0	4,400	68.5	3,700	95
100	58.0	5,100	62.5	4,200	66.5	3,600	100
105	56.0	4,800	60.5	4,100	64.5	3,500	105
110	53.5	4,400	58.0	3,900	62.0	3,400	110
115	51.5	4,100	56.0	3,800	60.0	3,300	115
120	49.0	3,700	54.0	3,700	57.5	3,200	120
125	46.5	3,400	51.5	3,500	55.5	3,200	125
130	44.0	3,100	49.0	3,200	52.5	3,100	130
135	41.5	2,900	46.0	2,900	50.0	3,000	135
140	38.5	2,600	43.0	2,700	46.5	2,700	140
145	35.5	2,300	40.0	2,400	43.0	2,400	145
150	32.0	2,000	36.5	2,200	39.5	2,100	150
155	28.0	1,700	32.5	1,900	34.5	1,800	155
160	23.5	1,400	28.0	1,600	28.5	1,600	160

⚠ WARNING

Do Not Lower 61 Ft. Offset Fly In Working Position Below 20 Degrees Unless Main Boom Length Is 108 Ft. Or Less, Since Loss Of Stability Will Occur Causing A Tipping Condition.

Note: Refer To Page 8 For "Lifting Capacity Deductions" For Capacity Reductions Caused By Stowed Or Erected Auxiliary Load Handling Equipment.

This Page Left Blank Intentionally